IN THE UNITED STATES PATENT AND TRADEMARK OFFICE

In re Patent of:	Matt Crowley, et al.	
U.S. Patent No.:	8,497,928	Attorney Docket No.: 39521-0047IP1
Issue Date:	July 30, 2013	
Appl. Serial No.:	11/831,051	
Filing Date:	July 31, 2007	
Title:	TECHNIQUES TO AUTOMATICALLY FOCUS A DIGITAL CAMERA	

Mail Stop Patent Board
Patent Trial and Appeal Board
U.S. Patent and Trademark Office
P.O. Box 1450
Alexandria, VA 22313-1450

PETITION FOR *INTER PARTES* REVIEW OF UNITED STATES PATENT NO. 8,497,928 PURSUANT TO 35 U.S.C. §§ 311–319, 37 C.F.R. § 42

TABLE OF CONTENTS

EXHIBITS

APPLE-1001	U.S. Patent No. 8,497,928 to Crowley, et al. ("the '928 patent")
APPLE-1002	Excerpts from the Prosecution History of the '928 Patent ("the Prosecution History")
APPLE-1003	Declaration of Dr. Phillip D. Wright
APPLE-1004	Curriculum Vitae of Dr. Phillip D. Wright
APPLE-1005	USP 6,919,927 (Hyodo)
APPLE-1006	USPub 2006/0055814 (Okawa)
APPLE-1007	USP 6,151,073 (Steinberg'073)
APPLE-1008	Reserved
APPLE-1009	USP 7,852,381 (Abe)
APPLE-1010	Reserved
APPLE-1011	Reserved
APPLE-1012	Reserved
APPLE-1013	Reserved
APPLE-1014	Reserved
APPLE-1015	Reserved
APPLE-1016	Reserved
APPLE-1017	DIGITAL PHOTOGRAPHY FOR DUMMIES, 5TH EDITION (2005)

APPLE-1018	NIKON COOLPIX 5700 USER GUIDE (2004) (http://pages.mtu.edu/~shene/DigiCam/User-/5700/AUTO-FOCUS/Auto-Focus.html)
APPLE-1019	USING DIGITAL WHITE BALANCE INDOORS (2004) (https://web.archive.org/web/20040611131613/http://www.olympusamerica.com/cpg_section/lessons/C750/WBIndoors/index.html)
APPLE-1020	LCM ASSEMBLY TECHNIQUES (2002)
APPLE-1021	ANALOG RESISTIVE TOUCH PANELS AND SUNLIGHT READABILITY (2006)
APPLE-1022	MODERN DICTIONARY OF ELECTRONICS, 7TH EDITION (1999) (excerpt, "central processing unit")
APPLE-1023	10 USABILITY HEURISTICS FOR USER INTERFACE DESIGN (1995)
APPLE-1024	BATTERY USAGE IN HP DIGITAL CAMERAS (2005)
APPLE-1025	WHITE BALANCE AND COLOR CORRECTION IN DIGITAL CAMERAS (2005)
APPLE-1026	Reserved
APPLE-1027	Reserved
APPLE-1028	Reserved
APPLE-1029	Reserved
APPLE-1030	Reserved
APPLE-1031	Reserved
APPLE-1032	Reserved
APPLE-1033	LENS DRIVERS FOCUS ON PERFORMANCE IN HIGH-RESOLUTION CAMERA MODULES (2006)

APPLE-1034	Exhibit 928 to Qualcomm Inc.'s Patent Initial Infringement Contentions in *Qualcomm Inc. v. Apple Inc*. (N.D. Cal., Case No. 3:17-cv-02403-CAB-MDD)
APPLE-1035	Qualcomm Inc.'s Complaint for Patent Infringement in *Qualcomm Inc. v. Apple Inc*. (N.D. Cal., Case No. 3:17-cv-02403-CAB-MDD)
APPLE-1036	FUNDAMENTALS OF OPTICS, FOURTH EDITION (excerpt) (2001)

Apple Inc., ("Petitioner") petitions for *Inter Partes* Review ("IPR") of claims 7, 8, 10, 11, and 13 ("the Challenged Claims") of U.S. Patent No. 8,497,928 ("the '928 Patent").

I. REQUIREMENTS FOR IPR UNDER 37 C.F.R. § 42.104

A. Grounds for Standing Under 37 C.F.R. § 42.104(a)

Apple certifies that the '928 Patent is available for IPR. The present petition is being filed within one year of service of a complaint against Apple in Case No. 3:17-CV-02403 at the United States District Court for the Southern District of California. Apple is not barred or estopped from requesting this review of the Challenged Claims.

B. Challenge Under 37 C.F.R. § 42.104(b) and Relief Requested

Petitioner requests IPR of the Challenged Claims on the grounds listed below:

Ground	Claims	Basis
Ground 1-A	**7, 8, 10, 11**	103–Hyodo-Okawa-Steinberg'073
Ground 1-B	**13**	103–Hyodo-Okawa-Steinberg'073-Abe

Hyodo (APPLE-1005), published July 19, 2005, Okawa (APPLE-1006), published March 16, 2006, and Steinberg'073 (APPLE-1007), published November 21, 2000, each qualify as prior art under at least 35 U.S.C. §102(b) because they were published over a year before the earliest proclaimed priority date (July 31, 2007) of the '928 Patent. Abe (APPLE-1009), filed June 30, 2006 qualifies as prior art under at least 35 U.S.C. §102(e) because it is a published version of a patent

application filed in the United States before the earliest proclaimed priority date (July 31, 2007) of the '928 Patent.

II. RELATION TO OTHER PATENT OFFICE PROCEEDINGS

A. Relation to *Ex Parte* Prosecution

While the disclosure of Hyodo may have been cited and substantively discussed during prosecution of the '928 Patent, the specific arguments, evidence, and combinations of prior art teachings set forth in this Petition have not been considered by the Patent Office. Specifically, Hyodo was applied as an *anticipatory* reference during *ex parte* prosecution. Hyodo was not advanced in combination with any other prior art, but is now presented anew under an *obviousness* analysis supported by considerable evidence that was unavailable to the Examiner. For example, at Section IV, Ground 1-A, Element 7[d], Petitioner proffers expert testimony in support of a new argument that Hyodo's disclosure suggests the flash intensity feature of the Challenged Claims under the broad claim interpretation advanced through Patent Owner's allegations of infringement in district court. *See Kayak Software Corp*., *et al. v International Business Machines Corp*., CBM2016-00075, Paper 16 at 11 (PTAB December 15, 2016) (informative) ("changed claim constructions . . . could weigh in favor of institution"). In sum, the new, distinctive and more comprehensive analysis set forth in this Petition "shed[s] a different light" on the disclosure of Hyodo. *Google Inc*. *v*. *Blackberry LTD*., IPR2017-00914, Paper

7 at 20-21 (PTAB Sept. 11, 2017) (declining to deny institution under § 325(d) in light of new evidence and argument); *see also Celltrion*, *Inc*. *v Genentech*, *Inc*., IPR2017-01139, Paper 30 at 12 (PTAB Jan. 25, 2018), *Par Pharmaceutical*, *Inc*. *v*. *Horizon Therapeutics*, *LLC*, IPR2017-01767, Paper 10 at 16 (PTAB Jan. 30, 2018).

Also weighing in favor of instituting review is that the present analysis relies upon portions of Hyodo that were not identified on the prosecution record. *See*, *e.g*., *Donghee America*, *Inc*., *et al*. *v*. *Plastic Omnium Advanced Innovation and Research*, IPR2017-01654, Paper 9 at 18 (PTAB Jan. 19, 2018) (finding the petitioner's argument did not overlap the prosecution record because "the Examiner never identified or analyzed" a portion of the reference relied upon by the petitioner). For example, the prosecution record reflects that key recitations from Hyodo regarding the '928 Patent's claimed feature of performing auto-focus "while the image is being displayed" were not considered despite the applicant's assertion that Hyodo lacked such disclosure. This overlooked aspect of Hyodo and its suggestion to a person of ordinary skill are discussed below at Section IV, Ground 1-A, Element 7[c]. Thus, while <u>certain portions</u> of Hyodo's disclosure may have been adequately considered by the Examiner, the grounds of unpatentability presented by Petitioner are substantially different. *See Kayak Software*, Paper 16 at 11 ("situations where . . . . the prior art at issue was only cursorily considered [] can weigh against exercising the discretion").

Further still, Hyodo's disclosure is also presented in this Petition with the benefit of supplemental disclosures from Okawa and Steinberg'073, each non-cumulative and beyond the Examiner's consideration, that directly address the deficiencies advanced by the applicant when seeking to justify novelty. Thus, the Examiner did not consider substantially the same combinations of prior art teachings during prosecution. *See*, *e.g.*, *Intel Corporation v. Future Link Systems*, *LLC*, IPR2016-01402, Paper 8 at 7 (PTAB Jan. 12, 2017), *Baker Hughes Incorporated v. LiquidPower Specialty Products Inc*., IPR2016-01903, Paper 11 at 12-13 (PTAB March 31, 2017), *TomTom Inc*., *et al. v. Smart Wearable Technologies Inc*., IPR2017-01826, Paper 12 at 12 (PTAB Jan. 30, 2018).

Unlike certain prior cases where other panels have denied institution under 35 U.S.C. § 325(d)[1], each of the grounds advanced in *this* Petition are based in

[1] *See*, *e.g.*, *Cultec*, *Inc*. *v. StormTech LLC*, IPR2017-00777, Paper 7 at 8-13 (PTAB Aug. 22, 2017) (informative) (petitioner relied upon similar claim charts to those it submitted as a third party during prosecution), *Unified Patents Inc. v. John L. Berman*, IPR2016-01571, Paper 10 at 9-13 (PTAB Dec. 14, 2016) (informative) (petitioner failed to present any reason for readjudicating the same prior art presented to the examiner), *Becton, Dickinson and Company v. B. Braun Melsungen AG*, IPR2017-01586, Paper 8 at 17-28 (PTAB Dec. 15, 2017) (informative) (petitioner

significant measure on new prior art and arguments, and therefore warrant substantive consideration by the Board.

B. Relation to Other Petitions

As noted at Section VII(B) (*infra*), Petitioner has also challenged claims 7, 8, 10, 11, and 13 of the '928 Patent based on different prior art references in a concurrently filed petition. Any consequential burden on Patent Owner and the Office that arises from these two petitions is offset by the efficiency gained from Petitioner's culling of claims from challenge that are indefinite (*e.g.,* claims 1-5 and 16)[2] and/or far removed from the co-pending district court litigation (*e.g.*, claims 5, 9, 12, and 14-16). As a result, the two concurrently filed petitions offer distinct meritorious challenges that are both narrowly focused and robustly articulated. Moreover, as the petitions are concurrently filed, the proceedings can progress in parallel with further efficiencies gained from shared depositions and oral hearings,

---

combined two references applied separately by the examiner), *Kayak Software*, Paper 16 at 7-12 (petitioner advanced a new three-way combination of references "extensively considered" by the Office in various other two-way combinations).

[2] Claim 1, for example, recites certain "module" terms that invoke § 112, ¶6 under *Williamson v. Citrix Online*, LLC, 792 F.3d 1339 (Fed. Cir. 2015) (en banc), yet lack the necessary written description support.

allowing the Board and the parties to work towards the common goal of "secur[ing] the just, speedy, and inexpensive resolution of every proceeding." 37 CFR § 42.1(b).

III. SUMMARY OF THE '928 PATENT

A. Brief Description

The '928 Patent is "generally directed to techniques to automatically focus a digital camera." APPLE-1001, 1:36-37; *see also* APPLE-1003, ¶¶31-44 (reviewing the '928 Patent in detail with reference to APPLE-1017, APPLE-1019). That said, even the '928 Patent concedes that "[m]any [existing] digital cameras provide an autofocus feature . . . that allows a user of a digital camera to obtain the correct focus on a subject rather than requiring the operator to adjust focus manually." *Id.*, 1:13-16 (Background). Accordingly, the alleged advance over the prior art touted by the '928 Patent is merely "a technique to allow users to more easily determine the area of the photograph they wish to focus on[.]" *Id.*, 1:19-21. The basic paradigm of the '928 Patent is as simple as the three-step "logic flow" illustrated by its Figure 3 (at right)—Display the image with a first focal point (**302**); Select a second focal point for the image (**304**); and Focus on the second focal point (**306**). *See id.*, 1:30, 10:55-11:3.

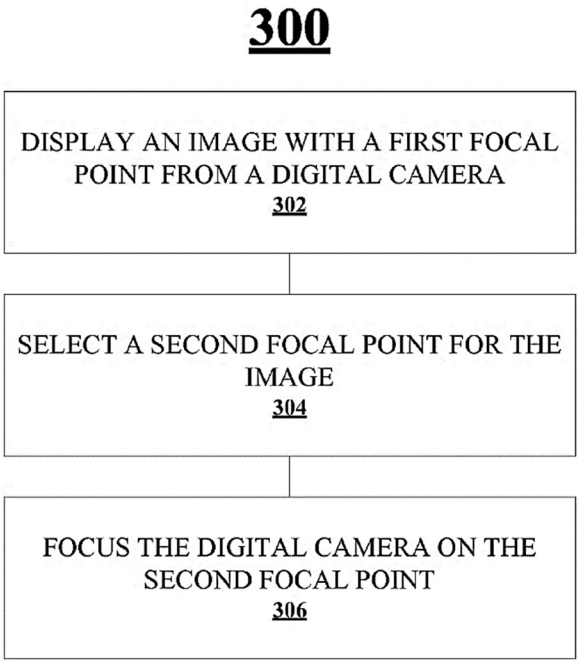

While the Challenged Claims provide verbose recitations of this rudimentary auto-focus technique, claim length does not equate to patentability. Nor should patentability be conferred by added recitations directed to camera functions (*e.g.*, touch-based user input and variable flash intensity) that were known in the art at the relevant time period.

B. The Prosecution History

The ’928 Patent was filed July 31, 2007 as Appl. No. 11/831,051 (“the ’051 Application”). Throughout a prosecution period spanning over three years, the claims of the ’051 Application were repeatedly rejected in view of the prior art and responsively amended or canceled by the applicant (Palm, Inc.). *See generally* APPLE-1002, 41-498. In response to the last of nine office actions issued by the Examiner, the applicant argued that an anticipation rejection based on Hyodo was unsubstantiated because Hyodo allegedly lacks disclosure of the following features (APPLE-1002, 47-49):

> Element 7[c]: focusing the lens component from the first focal point to the second focal point while the image is being displayed; and
>
> Element 7[d]: “selecting a flash level value representing a flash intensity for a flash component based on the second focal point.

As discussed below, however, performing auto-focus “while the image is being displayed” (Element 7[c]) and relating flash-intensity control to focal-point selection (Element 7[d]) were not novel or inventive concepts in 2007. APPLE-

1003, ¶¶82, 89, 99-106 (Element 7[c]); *see also id*., ¶¶42, 107-113 (Element 7[d]). In fact, a POSITA would have been motivated to incorporate such functionality into the digital camera of Hyodo based on teachings from Okawa and Steinberg'073.

C. Claim Construction and Level of Skill

Petitioner submits that all terms should be given their plain meaning as understood by a person of ordinary skill in the art at the time of the alleged invention ("POSITA") in view of the '928 Patent's specification, but reserves the right to respond to any constructions that may later be offered by Patent Owner or adopted by the Board. Petitioner is not waiving any arguments concerning indefiniteness or claim scope that may be raised in litigation.

For purposes of this IPR, a POSITA would have had a Master of Science Degree in an academic area emphasizing electrical engineering, computer engineering, optics design or an equivalent field (or a similar technical Master's Degree, or higher degree). APPLE-1003, ¶¶25-26. Alternatively, a POSITA would have had a Bachelor's Degree (or higher degree) in an academic area emphasizing one or more of these technical disciplines and three or more years of corresponding industry work experience. APPLE-1003, ¶¶25-26. Such an individual would also have education or industry experience in the area of user-interface design. Additional education or industry experience may compensate for a deficit in one of the other aspects of the requirements stated above. APPLE-1003, ¶¶25-26.

IV. THE CHALLENGED CLAIMS ARE UNPATENTABLE

A. [GROUND 1-A]—Claims 7, 8, 10, 11 are rendered obvious by Hyodo in view of Okawa and Steinberg'073

Overview of Hyodo[3]

Hyodo, entitled "Camera with Touchscreen," "generally relates to a camera with an image display . . . having a touch panel." APPLE-1005, 1:14-16; *see also* APPLE-1003, ¶70. Hyodo's camera is, therefore, "capable of being operated by touching a screen of [the] image display." *Id*., 1:60-65. Like the '928 Patent, Hyodo's camera "is preferably characterized in that: the touch panel determines a position of a touched portion on the surface thereof; and the controller adjusts at least one of a focus and an exposure of the camera with respect to a principal subject corresponding to the position of the touched portion determined by the touch panel." *Id*., 2:13-18; *see also id*., 5:56-6:67, Figures 5-6. Accordingly, Hyodo describes selection of a portion of an image to serve as a focal point for focus and exposure. For instance, Hyodo states that "the focusing and exposure is adjusted to the principal subject by touching the principal subject that is displayed on the image display, and the image of the principal subject can be recorded by pressing the principal subject harder." *Id*., 2:19-23*; see also id*., 5:56-6:67, Figures 5-6.

[3] Petitioner incorporates this Hyodo discussion into Grounds 1A-1B, *infra*.

Figures 1 and 2 (provided below) of Hyodo illustrate a digital camera **1** including, among other components, an imaging part **2**, a flash **6**, a liquid crystal display (LCD) **10**, and a light-permeable touch panel **12** arranged over LCD **10**. *See* APPLE-1005, 3:10-41; *see also* Figure 3. Hyodo's touch panel **12** is designed to "measure touch three-dimensionally" in terms of position (XY coordinate values) and pressure (Z coordinate value). *Id.*, 3:34-39.

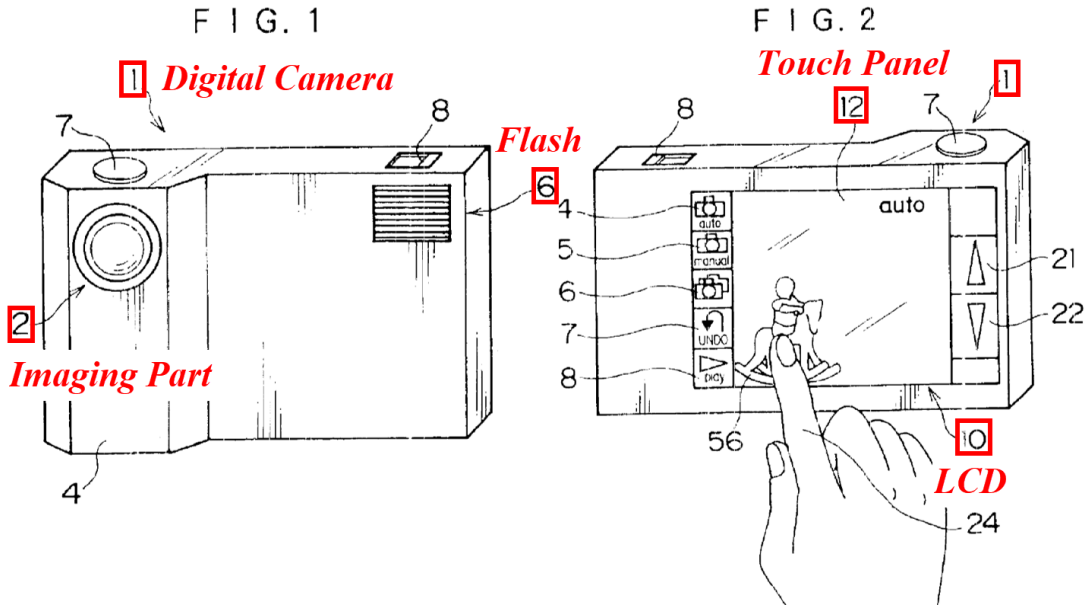

With reference to the block diagram of Figure 4 (provided below), Hyodo explains that imaging part **2** includes, among other components, a taking lens **40**, an imaging CCD sensor **44**, and a lens driving part **52**. *See id.*, 3:66-4:2. CCD **44** receives and converts light through taking lens **40** into a pixelated image signal. *See id.*, 4:18-26. The motorized lens driving part **52** moves a focus lens within taking lens **40** as part of an auto-focus procedure. *See id.*, 4:3-9. The image signal from CDD **44** of imaging part **2** is processed, output, and displayed on LCD **10**, which "is

capable of displaying not only still images . . ., but also images (moving images or intermittent images) before the shutter [is] releas[ed]." *Id.*, 4:44-54, Figure 3.

F I G. 4

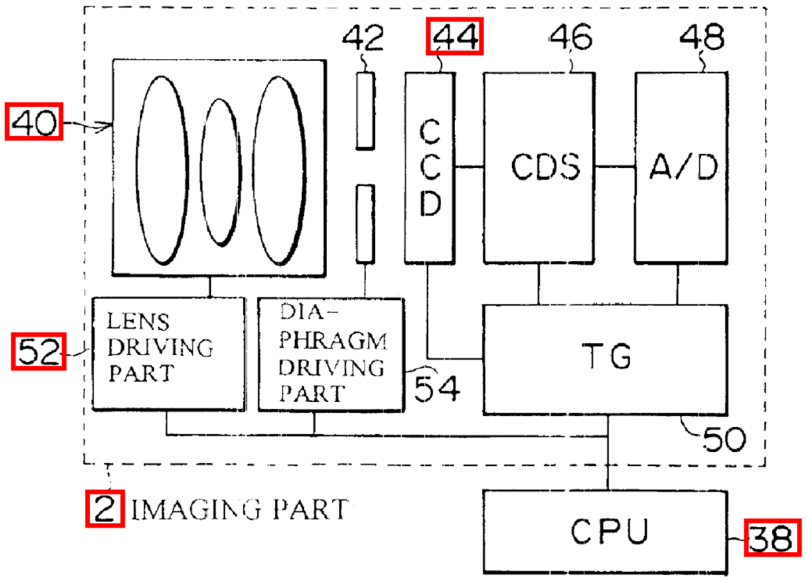

Functionality of Hyodo's Imaging Part 2, including Taking Lens 40, CCD 44, and Lens Driving Part 52, governed by CPU 38

The various functions of Hyodo's camera are governed by a central processing unit (CPU) **38**. *See* APPLE-1005, 4:55-5:6. For example, "CPU **38** supervises the circuits in the camera **1**, and determines the touched portion of the touch panel **12** and the pressure applied to the touched portion according to the signal outputted from the touch panel **12**." *Id.*, 4:55-58. In response to this touch-based user input, CPU **38** controls the auto-focus function, as well as auto-exposure, auto-flash, and auto-white balance functions. *See id.*, 4:58-67, 5:22-33 (describing auto-focus).

Overview of Okawa[4]

Okawa relates to "digital cameras equipped with an auto focus function," and is particularly concerned with providing a "focusing notification method to provide notification about elapsed time from the start of the auto focus operation until focus is achieved." APPLE-1006, [0003]; *see also* APPLE-1003, ¶71. Accordingly, Okawa describes techniques for displaying a "focal mark" on the image during the auto-focus procedure. APPLE-1006, [0012]; *see also id*., Abstract, [0003], [0017-0018], [0028], [0031-0031], [0038], [0041-0044]. In more detail, Okawa describes how "the focal mark displayed on display unit **20** is changed according to the elapsed time" during auto-focus. APPLE-1006, [0028]. Okawa's approach synchronizes changes to the focal mark with the image frame rate of the display. *See* APPLE-1006, [0030-0031]; APPLE-1003, ¶¶100-101. Thus, the rate of change and shape/size/color of the focal mark provide cues to the user regarding the status of the auto-focus process. *See* APPLE-1006, [0019], [0037-0039]. In one of multiple examples, Okawa describes how a rectangular focal mark is progressively reduced in size on the image display during auto-focus until the process is complete, when the focal mark **30** is changed to a cross, signaling completion to the user. APPLE-1006, [0032], Figures 5A-5F (annotated below).

[4] Petitioner incorporates this Okawa discussion into Grounds 1A-1B, *infra*.

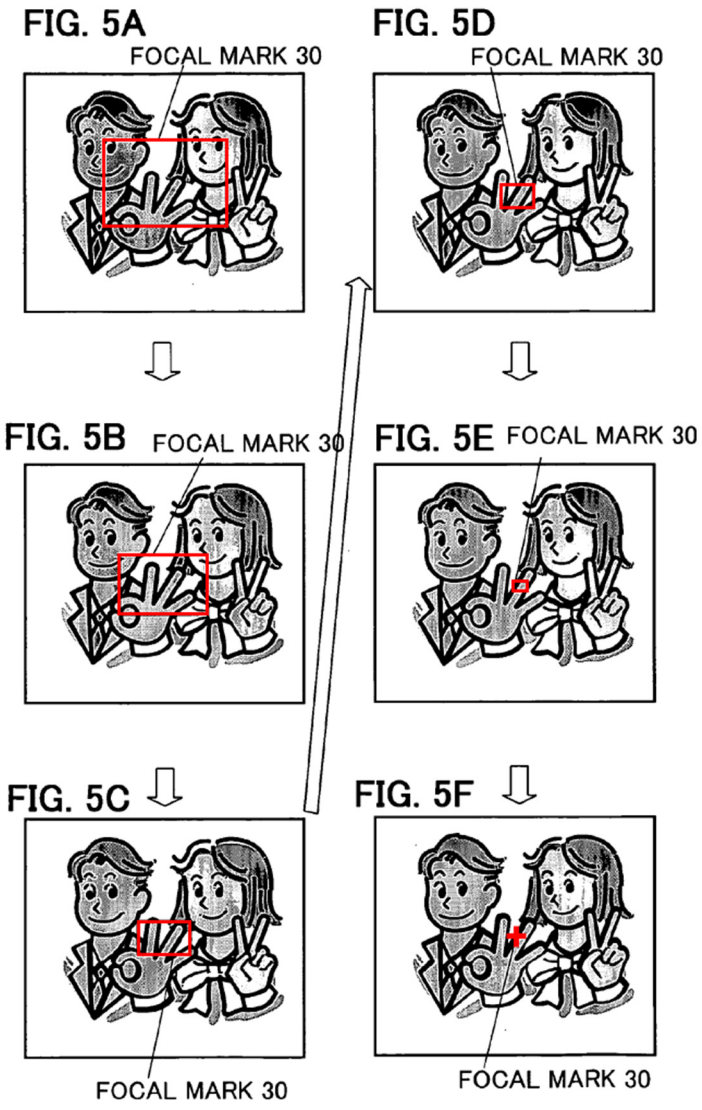

Okawa's Progressively Changing Focal Mark Notification Displayed on the Image During Auto-Focus

Overview of Steinberg'073[5]

Steinberg'073 "provide[s] an improved digital camera having provision for determining optimum flash energy for illumination of a selected area of an image." APPLE-1007, 2:30-33; *see also id*., 1:5-10; *see also* APPLE-1003, ¶72. More specifically, the approach described by Steinberg'073 includes enabling a low-energy pre-flash, performing an exposure analysis based on pixel output during the pre-flash, and deriving a final flash energy value for correct exposure of the image from the exposure analysis. *See*, *e.g*., APPLE-1007, 2:60-3:14; *see also id*., Abstract, 4:28-48; 5:10-6:4; *see also* APPLE-1003, ¶¶110-113.

The exposure analysis disclosed by Steinberg'073 is performed by plotting a histogram of image intensity values corresponding to a select sampling of pixels from the image sensor and determining a scaling factor from the histogram for adjusting the flash energy. *See* APPLE-1007, 6:59-7:22, 8:19-57, 9:18-11:33, Figures 2-11. According to Steinberg'073, the pixel sampling can be conducted so as to weight a particular portion of the image more heavily than other portions. *See* APPLE, 1007, 8:19-57. "In other words, a particular area of the image can be over sampled in order to weight it as more important in determining what is a correct exposure." APPLE-1007, 8:51-54. The over-weighted region can be in the center

[5] Petitioner incorporates this Steinberg'073 discussion into Grounds 1A-1B, *infra*.

of the image or at any other location of interest. *See* APPLE-1007, 8:54-57, 6:66-7:4.

The Hyodo-Okawa-Steinberg'073 Combination[6]

As mentioned, Hyodo describes a digital camera including, among other features: (**1**) a touch-based interface for receiving user input to select a portion of a displayed image; and (**2**) auto-focus functionality to place the user-selected portion of the image in clear focus. APPLE-1003, ¶73. Incorporation of Okawa's teachings yields an improved digital camera by introducing functionality that provides status update cues to the user through a progressively updating focal mark overlaying the image on the display during the auto-focus process. APPLE-1003, ¶73. Further improvement of Hyodo's camera, which also includes auto-flash functionality, is achieved through integration of Steinberg's disclosure of determining the appropriate amount of flash energy to properly light and expose a selected portion of the image. APPLE-1003, ¶73.

Additional details regarding the combined teachings of Hyodo, Okawa, and Steinberg'073, including the various motivations that would have led a POSITA to implement such a combination, are provided in the following element-by-element analysis.

[6] Petitioner incorporates this discussion into Grounds 1A-1B, *infra*.

Claim 7:

7[pre]: "A method for operating a mobile device, the method being performed by one or more processors"

Even if the preamble *were* a limitation, which it is not, the Hyodo-Okawa-Steinberg'073 combination provides Element 7[pre]. APPLE-1003, ¶¶74-75, 86-87. For example, Hyodo discloses a digital camera **1** depicted as appropriately sized to be grasped by a human hand. *See* APPLE-1005, 3:10-13, Figures 1-2 (annotated below); APPLE-1003, ¶¶74-75. Further, the shape of Hyodo's digital camera **1** is that of a typical point-and-shoot camera commonly carried and operated by a human user. APPLE-1003, ¶¶74-75. Accordingly, Hyodo's design incorporates "a grip **4**, [through] which a user can easily hold the camera **1** with his/her right hand." APPLE-1005, 3:14-18. Hyodo's disclosure is, therefore, consistent with the '928 Patent's specification, which identifies a "digital camera" as a type of "electronic device" (1:6-7, 7:9-12), and goes on to implicate the "handheld" characteristic as exemplary of a "*mobile* electronic device" (1:54-57). APPLE-1003, ¶¶74-75.

F I G. 2

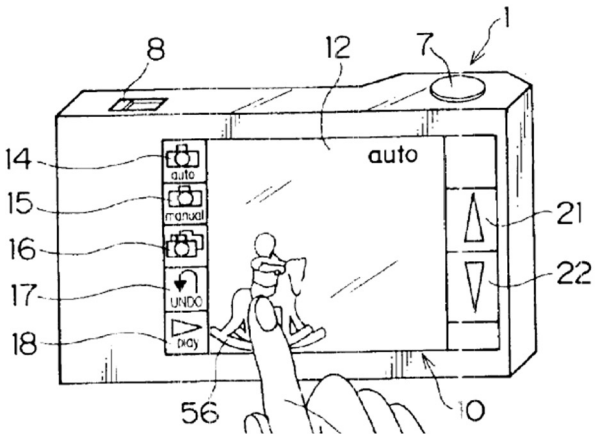

Hyodo's Mobile Device: A Digital Camera Shaped/Sized to Be Carried in the Hand of a User

As for the various operations of digital camera **1**, Hyodo describes a central processing unit (CPU) **38** that facilitates auto-focus, auto-flash, and auto-white balance. APPLE-1005, 4:55-5:6. Thus, Hyodo's disclosure again mirrors the '928 Patent's specification, which states: "The host processor **102** may be implemented as a host central processing unit (CPU) using any suitable processor or logic device, such as a general purpose processor." APPLE-1001, 3:17-30; APPLE-1003, ¶¶86-87.

7[a]: "displaying, on a touchscreen display, an image having a first focal point, the image being provided by a lens component"

The Hyodo-Okawa-Steinberg'073 combination provides Element 7[a]. APPLE-1003, ¶¶39, 76-81, 83-85, 89-94, 114. To start, Hyodo describes "a digital camera **1** with a liquid crystal display (LCD) **10** as an image display." APPLE-1005, 3:10-13. Hyodo then goes on to explain that digital camera **1** further includes "[a] touch panel **12** with light permeability [that] is arranged over the LCD **10**." APPLE-1005, 3:32-33, Figure 3 (annotated below). Hyodo's touch panel **12** "can measure touch three-dimensionally"—*i.e.*, in terms of position (XY coordinate values) and pressure (Z coordinate value). APPLE-1005, 3:33-41.

It would have been obvious to a POSITA in view of Hyodo's disclosure that an LCD and overlaid touch panel provide a "touchscreen display," as claimed. APPLE-1003, ¶¶76-79. In particular, the POSITA would have understood and gleaned from Hyodo's disclosure as a whole that LCD **10** and touch panel **12** are

integrated components that, together, provide a touch-sensitive LCD—*i.e.*, a "touchscreen display"—just as the '928 Patent's specification describes. APPLE-1003, ¶¶78-79 (citing APPLE-1001, 4:32-35 ("In one embodiment, for example, the display **114** may be implemented by a LCD such as a touch-sensitive color (e.g., 16-bit color) thin-film transistor (TFT) LCD screen."); APPLE-1020; APPLE-1021).

For example, Hyodo refers to "an image display <u>having</u> a touch panel," suggesting that LCD **10** and touch panel **12** are constituent parts of the same touchscreen display assembly. APPLE-1005, 1:13-16; *see also id.*, 7:46-48; APPLE-1003, ¶78. Indeed, these components are even labeled in Hyodo's Figure 3 (annotated below) as "parts." APPLE-1003, ¶78.

F I G. 3

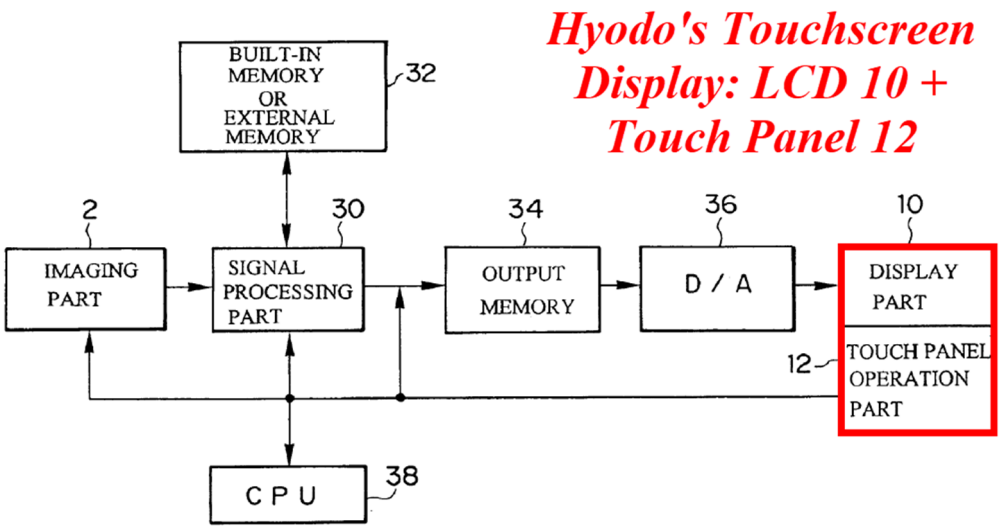

Similarly, Hyodo's Figures 2 and 5 provide coextensive lead lines to reference numerals **10** and **12** of the LCD and touch panel, respectively. Moreover, the applicant's arguments during prosecution tacitly concede this mapping, which was

raised by the Examiner and left unrebutted. *See* APPLE-1002, 58 (the Examiner mapping Hyodo's LCD **10** and touch panel **12** to the claimed "touchscreen display"), 48-49 (the applicant describing Hyodo's touch sensing and image display functionalities as performed by "the screen").

The Hyodo-Okawa-Steinberg'073 combination further provides the feature of "the image being provided by a lens component," as claimed. APPLE-1003, ¶¶80-81, 83-85 (citing APPLE-1017). To illustrate, Hyodo describes a digital camera **1** having an imaging part **2**, which includes a taking lens **40**. *See* APPLE-1005, 3:14-22, 3:66-4:2, Figures 1, 3, 4. Taking lens **40** includes "a zoom lens composed of multiple lenses," and "a focus lens [that] can be moved by an autofocus (AF) function." APPLE-1005, 4:3-8; *see also id.*, 3:18-22, 3:66-4:2, Figure 4 (annotated below); APPLE-1003, ¶¶83-85.

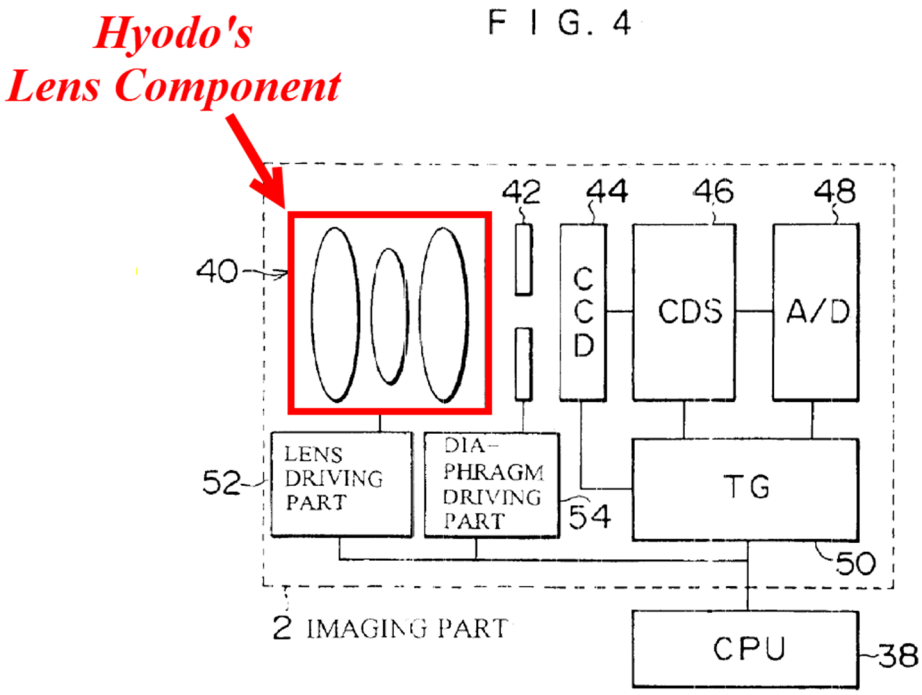

Again, Hyodo's disclosure is consistent with the '928 Patent's specification, which states: "Lens component **204** may consist of a photographic or optical lens or assembly of lenses." APPLE-1001, 8:35-50; APPLE-1003, ¶85.

As for providing the image displayed on the touchscreen display, Hyodo explains that "[t]he subject image [is] formed on a light-receiving surface of the CCD **44** through the taking lens **40**." APPLE-1005, 4:17-18, Figure 4. The image is then "photoelectrically converted [by CCD **44**], and sequentially read out as an image signal." APPLE-1005, 4:18-19, Figure 4. The image signal is processed by a signal processing part **30**, transmitted to an output memory **34**, and delivered for display by LCD **10** through a digital/analog (D/A) converter **36**. *See* APPLE-1005, 4:44-50; *see also id*., 3:59-65, Figures 2-3. In short, the image viewed through taking lens **40** (Hyodo's "lens component") is converted, processed, and reproduced on LCD **10** (a component of Hyodo's "touchscreen display"). APPLE-1003, ¶¶80-81, 83-84. So, yet again, Hyodo's disclosure mimics the '928 Patent's specification, which states: "The image may be viewed through lens component **204** and reproduced on display **114**." APPLE-1001, 8:67-9:1; APPLE-1003, ¶84.

The Hyodo-Okawa-Steinberg'073 combination still further provides the feature of "displaying . . . an image having a first focal point," as claimed. APPLE-1003, ¶¶89-94, 114. For example, Hyodo describes an approach to touch-based focal-point selection where the user contacts the touchscreen display (as provided

by touch panel **12** overlaying LCD **10**) with less than a predetermined pressure (**Touch T1**) to establish a first focal point via auto-focus, and then optionally performs the same gesture at a different location on the touchscreen display to establish a second focal point in the same way. *See* APPLE-1005, 5:22-33 (describing auto-focus in response to touch), 5:61-6:39 (describing an iterative approach to auto-focus), Figure 6 (annotated below).

As explained by Petitioner's expert, Hyodo's technique for designating a principal subject **56** through **Touch T1** (APPLE-1005, 5:61-6:39) is consistent with the '928 Patent's description of an image focal point as "the intended center of interest of a photograph and [] typically the point where the image will be in the clearest focus" (APPLE-1001, 9:4-6). APPLE-1003, ¶¶39, 91. Moreover, Hyodo's iterative approach to focal-point selection parallels that which Patent Owner has advanced in support of infringement allegations against Petitioner. *See* APPLE-1034, 32 ("[T]he Accused Products display an image that first has a focal point determined by, e.g., the Accused Products' autofocus feature or <u>a previous user-selected focal point</u>.").

F I G. 6

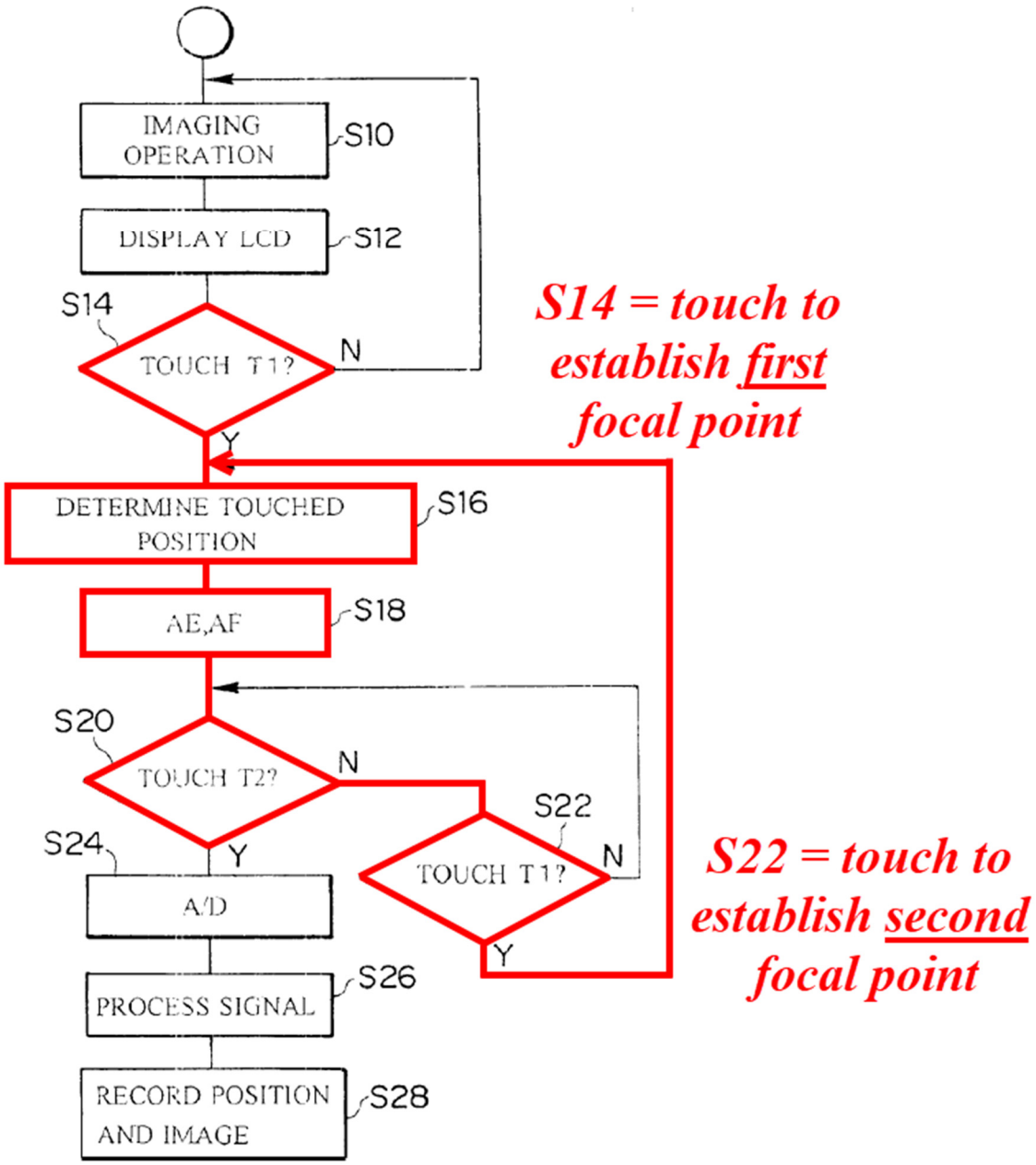
IMAGING OPERATION
S10
DISPLAY LCD
S12
S14
TOUCH T1?
N
Y
S14 = touch to establish first focal point
DETERMINE TOUCHED POSITION
S16
AE,AF
S18
S20
TOUCH T2?
N
S22
S24
Y
TOUCH T1?
N
A/D
Y
S22 = touch to establish second focal point
PROCESS SIGNAL
S26
RECORD POSITION AND IMAGE
S28

7[b]: "selecting a second focal point for the image in response to receiving a first type of user input on the touchscreen display, the second focal point corresponding to a location on the image displayed on the touchscreen display"

The Hyodo-Okawa-Steinberg'073 combination provides Element 7[b]. APPLE-1003, ¶¶90-94, 114. For example, Hyodo describes a touch-based technique for focal-point selection as follows:

> "<u>When the user touches the touch panel **12** on the LCD **10**, the position of the touched portion on the touch panel **12** is determined, and one of predetermined focal areas, to which the touched portion belongs, is designated</u>. Then, a focus evaluation value is calculated from the image signal of the designated focal area in order to control the focus system of the taking lens **40** based on the focus evaluation value." APPLE-1005, 5:22-33.

Regarding the claimed "first type of user input on the touchscreen display," Hyodo discloses touching the touch panel **12** (mapped to the "touchscreen display" at Element 7[b]) with "a pressure no more than [a] predetermined pressure"—*i.e.*, "a touch **T1**." APPLE-1005, 5:62-6:39, Figure 5 (annotated below), Figure 6; APPLE-1003, ¶¶90-92.

As to the claimed feature of responsively "selecting a second focal point for the image . . . corresponding to a location on the image displayed on the touchscreen display," Hyodo further discloses that the position of the user's touch **T1** on touch panel **12** is determined and recognized as the position of the principal subject **56** of

the image displayed on LCD **10**. APPLE-1005, 6:3-6, Figure 5 (annotated below); APPLE-1003, ¶¶90-94.

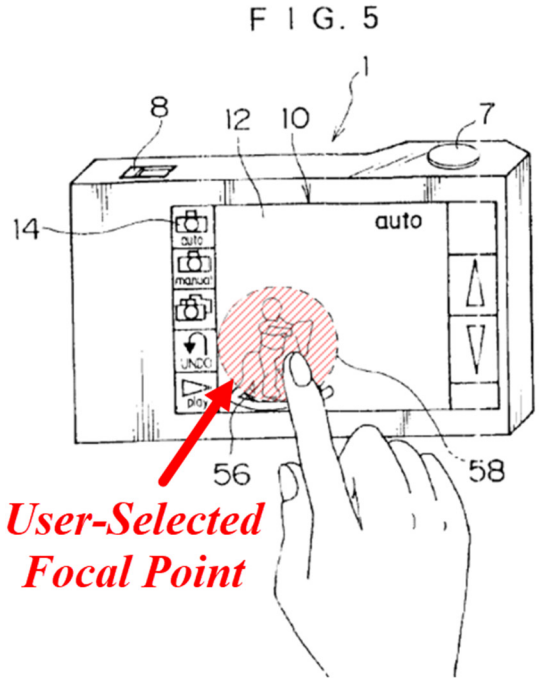

In short, the position of the touched portion on the touch panel **12** is determined at S**16**, and the position of the touched portion is recognized as the position of the principal subject **56**. Then, as shown in FIG. **5**, an area inside a circle in the predetermined size, which has the position of the touched portion as its center, is recognized to be the principal subject **56**, and the area of the principal subject, determined as described above, is circled with a frame (hereunder called an instruction frame) **58** and displayed.
Hyodo, 6:3-11

As noted by Petitioner's expert, the user's designation of a "principal subject" signals intent to establish a point of interest for the image, which is consistent with the '928 Patent's description of the image "focal point." APPLE-1001, 9:4-6 (the term "focal point" refers to "the center of interest of a photograph"), 12:38-40 ("In the given example, the user may tap the touchscreen display in the area of the face of their friend to change the focal point away from the waterfall."); APPLE-1003, ¶91. Accordingly, Hyodo's CPU **38** responds to touch **T1** user input by selecting an image focal point in accordance with the principal subject **56**. APPLE-1005, 5:22-33, 5:62-6:39, Figure 5. As recited above, "when the user touches the touch panel **12** on the LCD **10**," Hyodo's CPU **38** correlates "the position of the touched portion

on the touch panel **12**" with a "predetermined focal area" and "controls the focus system of the taking lens **40** via the lens driving part **52**" based on the calculated sharpness of the image at the focal area designated by the user's touch. APPLE-1005, 5:22-33. This procedure can be performed iteratively to establish respective ***first*** and ***second*** focal points. *See* Element 7[a], *supra* (Figure 6: **S20 → S22 → S16 → S18**); APPLE-1003, ¶114.

While the above discussion addresses the term "focal point" in the context of the '928 Patent's specification, the '928 Patent's claims are still rendered obvious even under a different interpretation of the term "focal point." For example, the focal-point selection feature of Element 7[b] remains fulfilled by the cited art references, even if the Board were to consider statements made by the applicant of '928 Patent's counterpart European application sufficient to limit the term "focal point" to an interpretation from an optics perspective (*e.g.*, the point at which the light in the lens system should converge or diverge).[7] APPLE-1003, ¶92. As

[7] Of course, the Board "is under no obligation to accept a claim construction proffered as a prosecution history disclaimer, *which generally only binds the patent owner*." *See*, *e.g.*, IPR2017-01833, Paper 8 at 11-12, 14 (PTAB Feb. 5, 2018) (quoting Tempo *Lighting*, *Inc. v. Tivoli*, *LLC*, 742 F.3d 973, 977 (Fed. Cir. 2014) (emphasis added)).

Petitioner's expert explains, Hyodo's disclosure suggests and demonstrates obviousness of a paradigm where the user provides an instruction to the camera (by touching the touchscreen display) that causes the camera to select a new focus lens position through an auto-focus procedure. APPLE-1003, ¶92 (citing APPLE-1005, 2:13-18, 4:3-8, 5:7-33, 5:62-6:39; APPLE-1033, 1-3). As to auto-focus, it would have been obvious to a POSITA in view of Hyodo's teachings that such a procedure would involve movement of the focus lens. APPLE-1003, ¶92 (citing APPLE-1033, 1-3). And, the POSITA would have understood that the optical focal point of the lens assembly moves relative to the image sensor as the focus lens is moved during auto focus. APPLE-1003, ¶92 (citing APPLE-1033, 1-3; APPLE-1036, 3-7, 24-26). Thus, selectively moving the focus lens position selectively moves the optical focal point of the lens assembly relative to the image sensor. APPLE-1003, ¶92.

7[c]: "focusing the lens component from the first focal point to the second focal point while the image is being displayed"

The Hyodo-Okawa-Steinberg'073 combination provides Element 7[c]. APPLE-1003, ¶¶71, 82, 87, 89-90, 96-106, 114. To start, the combination provides the claimed feature of "focusing the lens component from the first focal point to the second focal point." APPLE-1003, ¶¶96-98. For example, Hyodo's CPU **38** performs an auto-focus routine that "controls the focus system of the taking lens **40** via the lens driving part **52**" based on the calculated sharpness of the image at the focal area designated by the user's touch. APPLE-1005, 5:22-33; *see also id.*, 4:6-

8 ("In addition, a focus lens can be moved by an autofocus (AF) function[.]"). In other words, CPU **38** (purple) provides control signals (green) to lens driving part **52** (red) to adjust the focus lens of taking lens **40** (yellow) from a position providing a first focal point (*see* Element 7[a], Figure 6: **S14 → S16 → S18**) to a position providing a second focal point (*see* Element 7[a], Figure 6: **S20 → S22 → S16 → S18**). APPLE-1003, ¶¶96-98, 114.

F I G. 4

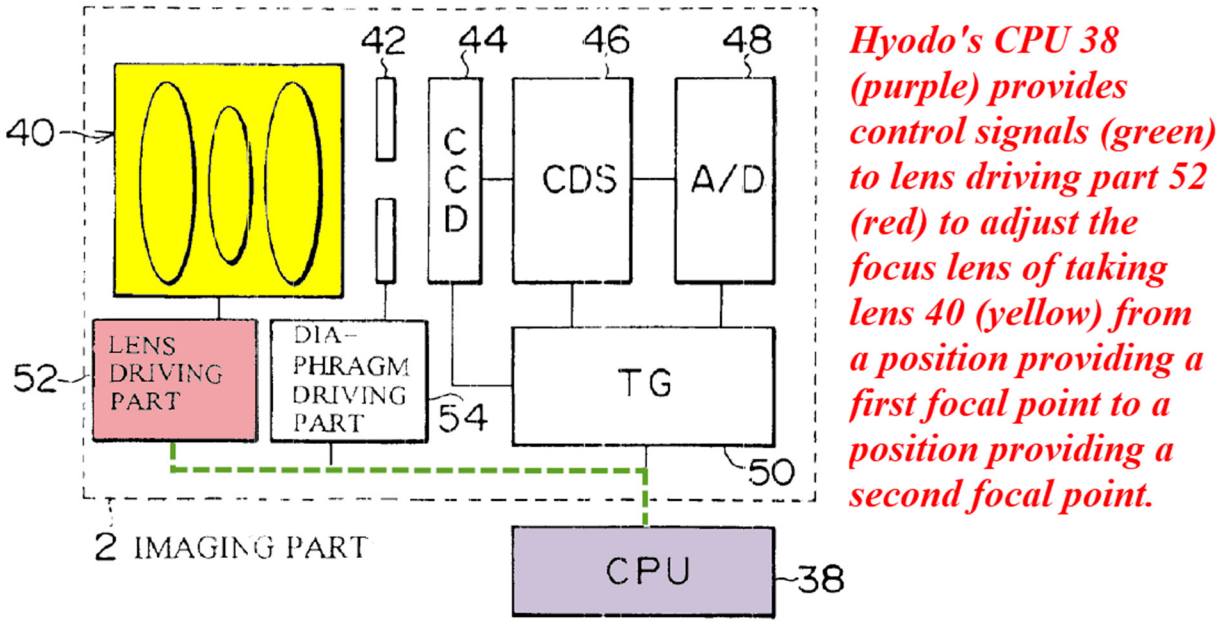

Notably, touch-based focal-point selection and auto-focus, as described by Hyodo, is consistent with the '928 Patent's specification <u>and</u> the functionality Patent Owner outlines in its infringement allegations submitted in co-pending district court litigation. *See* APPLE-1001, 8:48-49 ("The desired focus can be obtained with an

autofocus feature[.]"), 1:13 ("Many digital cameras provide an autofocus feature"); APPLE-1035, 21 ("The user can tap on a location on the displayed real-time image captured by the camera to autofocus on that point[.]").

The Hyodo-Okawa-Steinberg'073 combination further provides that the auto-focus procedure would be performed "while the image is being displayed," as claimed. APPLE-1003, ¶¶71, 82, 87, 89-90, 98-106. Indeed, irrespective of the applicant's novelty arguments, Hyodo's disclosure as a whole would have suggested this feature to a POSITA. APPLE-1003, ¶¶82, 87, 89-90, 98. During prosecution, the applicant merely distinguished certain isolated, narrow portions of Hyodo (5:22-35, 6:3-20) by advancing that these recitations "fail[ed] to disclose such a feature." APPLE-1002, 48-49. Even if the applicant's position were correct, which it is not[8], the arguments asserted during prosecution did not address the entirety of Hyodo. For example, the applicant failed to comment on Hyodo's disclosure at 4:51-56, which states: "The LCD **10** is capable of displaying not only still images, which are stored by the shutter releasing, but also images (<u>moving images</u> or intermittent

[8] The Board is bound only to "<u>*consult*</u> the patent's prosecution history" for material that "reinforc[es] the <u>*evident meaning*</u> of the claim language." *D'Agostino v. MasterCard Int'l, Inc.*, 844 F.3d 945, 948-49 (Fed. Cir. 2016). Misguided and/or conclusory arguments by the applicant need not be adopted.

images) before the shutter releasing." Nor did the applicant address Hyodo's disclosure at 5:60-61, which states: "The LCD **10** displays the captured image (moving image) based on the obtained image signal (**S12**)." *See also* APPLE-1005, Figure 6 (annotated below).

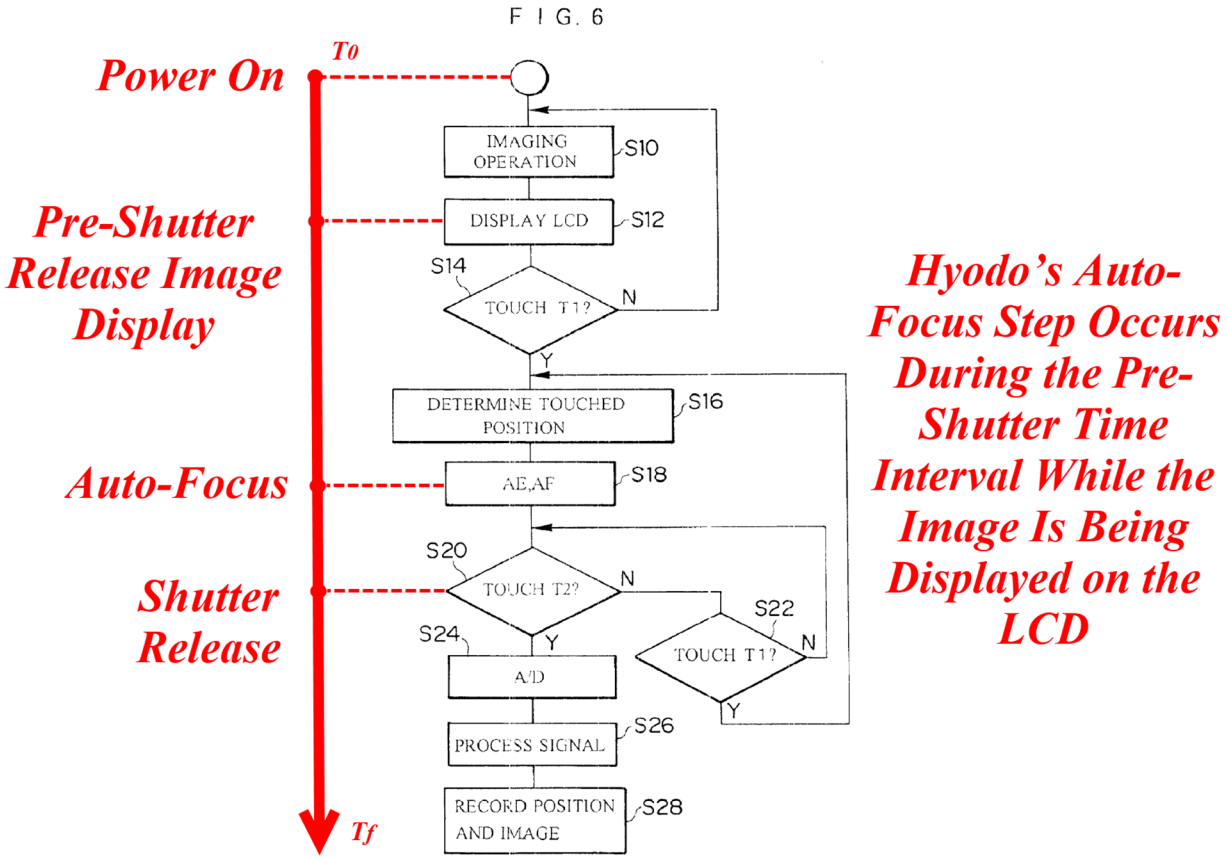

These disclosures indicate that Hyodo's LCD **10** would display the scene as a real-time (*i.e.*, moving) image preview in the time interval before release of the shutter. APPLE-1003, ¶¶82, 87, 89-90, 98. In this regard, Hyodo's disclosure parallels the '928 Patent's specification, which states: "The image on display **114** may comprise a substantially real-time preview of the image to allow for framing and previewing before capturing a photograph." APPLE-1001, 9:1-4; APPLE-1003,

¶82. As such, a POSITA would have appreciated Hyodo's suggestion that the auto-focus routine, also performed before shutter release/image capture, would occur in the manner claimed—*i.e.,* "while the image is being displayed." APPLE-1003, ¶98. Moreover, a POSITA would have recognized the advantage of displaying a real-time preview of the image, as this would enable a user to utilize LCD **10** as a viewfinder to frame the scene before capturing the image. APPLE-1003, ¶¶82, 89, 99.

Okawa's disclosure further suggests obviousness of an auto-focus procedure that occurs "while the image is being displayed." APPLE-1003, ¶¶99-106. In fact, as discussed above (*see* pp. 12-13, *supra*), Okawa's disclosure is specifically directed to techniques for displaying an updating "focal mark" on the image "during the time from the start of auto focus operation until focus is achieved." APPLE-1006, [0012]; *see also id*., Abstract, [0003], [0017-0018], [0028], [0031-0031], [0038], [0041-0044]. For example, Okawa explains that "the focal mark displayed on [the] display unit is changed according to the elapsed time" during auto-focus. APPLE-1006, [0028] (reference numbers omitted). As explained by Petitioner's expert, Okawa accomplishes display of an updating focal mark on the image concurrent with the auto-focus process by synchronizing changes to the focal mark with the image frame rate of the display. *See* APPLE-1006, [0017], [0019], [0030-0034], [0037-0039], Figures 5A-5F (annotated below); APPLE-1003, ¶¶100-101.

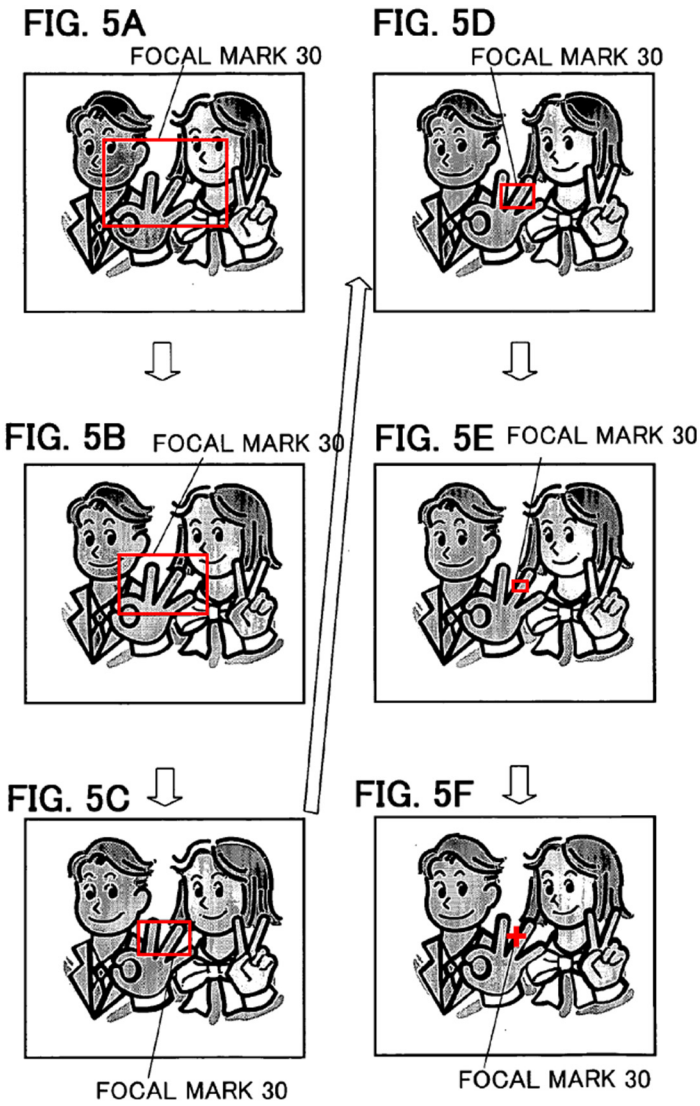

Okawa's Progressively Changing Focal Mark Notification Displayed on the Image During Auto-Focus

A POSITA would have been motivated to integrate Okawa's teachings regarding an updating focal mark during auto-focus into Hyodo's camera, at least because such an arrangement would merely have been the predictable result of (**a**) using a known technique to improve a similar device in the same way; and/or (**b**) applying a known technique to a known device ready for improvement. *See KSR v. Teleflex*, 550 U.S. 398, 405, 417 (2007); MPEP § 2143 I(C)-(D); APPLE-1003, ¶¶102-106.

First, as to the similarities between Hyodo and Okawa, both of these references are directed to handheld digital cameras including an image sensor, adjustable lens, and LCD for displaying the image. APPLE-1003, ¶105 (*comparing* APPLE-1005, 3:10-13, 3:66-4:8, 4:17-25 *with* APPLE-1006, [0006], [0027]). Further, these references describe similar auto-focus techniques where a motorized mechanism adjusts the lens as the focus/contrast of the image is evaluated. APPLE-1003, ¶105 (*comparing* APPLE-1005, 5:22-33 *with* APPLE-1006, [0027-0028], [0030]). Further still, Hyodo and Okawa each provide visual indications on the display to offer notifications to the user regarding auto-focus. APPLE-1003, ¶105 (*comparing* APPLE-1005, 6:3-19, Figure 5 *with* APPLE-1006, [0032], Figures 5A-5F). Hyodo provides an instruction frame **58** marking the user-selected focal point and Okawa provides an updating focal mark **30** signaling progress of the auto-focus procedure. *Id*. Thus, a POSITA would have recognized that the combination of Hyodo and Okawa would be achieved by progressively updating Hyodo's instruction frame **58** in terms of shape, size, and/or color during auto-focus similar to the way Okawa describes this technique with respect to focal mark **30**, as demonstrated in the annotated version of Hyodo's Figure 5 below. APPLE-1003, ¶105.

F I G. 5

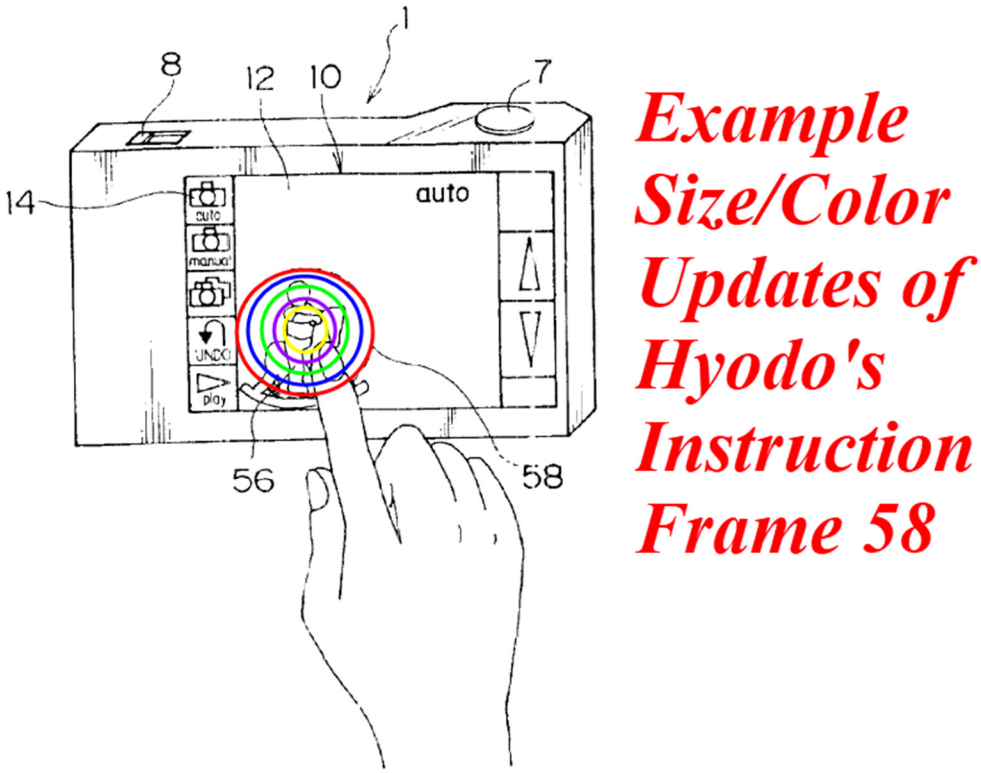

Second, given the similarities between Hyodo and Okawa, a POSITA would have recognized that the advantages achieved by Okawa's technique would likewise improve Hyodo's camera. APPLE-1003, ¶¶102-104; MPEP §2144(II) (an expected advantage is the strongest rationale in support of a reference combination). For example, Okawa's technique provides the advantage of "provid[ing] users with the assurance that auto focusing is [actually] under way," which improves the camera's usability. APPLE-1006, [0038]; APPLE-1003, ¶102. As a POSITA would have known and appreciated, visibility of system status—*i.e.*, "the system should always keep users informed about what is going on"—was (and is) a fundamental principle

of user interface design. APPLE-1003, ¶102 (citing APPLE-1023). Moreover, Okawa explains how displaying a progressively updating focal mark allows users to "judge how much more time will elapse before focus is achieved, so the probability of the movement of hands [during auto-focus] is decreased, and focus can be accurately achieved." APPLE-1006, [0019]; *see also id*., [0009-0010]; APPLE-1003, ¶103 (explaining, with reference to APPLE-1018, how a POSITA would have known that camera shake can disrupt auto-focus). Thus, Okawa's technique provides the advantage of improved auto-focus functionality. APPLE-1003, ¶102.

Third, due to the simplicity of Okawa's technique and the commonality with Hyodo, this predictable and advantageous combination would have been well within the level of ordinary skill. APPLE-1003, ¶106. As previously discussed, the preferred embodiments of Okawa and Hyodo are similar in terms of their hardware components and respective auto-focus procedures. As such, a POSITA would have incorporated the concept of displaying a progressively updating focal mark into Hyodo through the implementation details provided by Okawa—*i.e*., synchronizing the auto-focus procedure and notification updates with the frame rate of the image on the LCD. APPLE-1003, ¶106 (citing APPLE-1006, [0030-0031]).

7[d]: "selecting a flash level value representing a flash intensity for a flash component based on the second focal point"

The Hyodo-Okawa-Steinberg'073 combination provides Element 7[d]. APPLE-1003, ¶¶42, 72, 76, 107-113. To start, this combination provides the claimed "flash component." APPLE-1003, ¶76. For example, Hyodo describes "[a]n auxiliary flashing part **6**," and further explains that CPU **38** performs calculations for, among other things, "auto flashing." APPLE-1005, 3:23-24, 4:61-65, Figure 1 (annotated below).

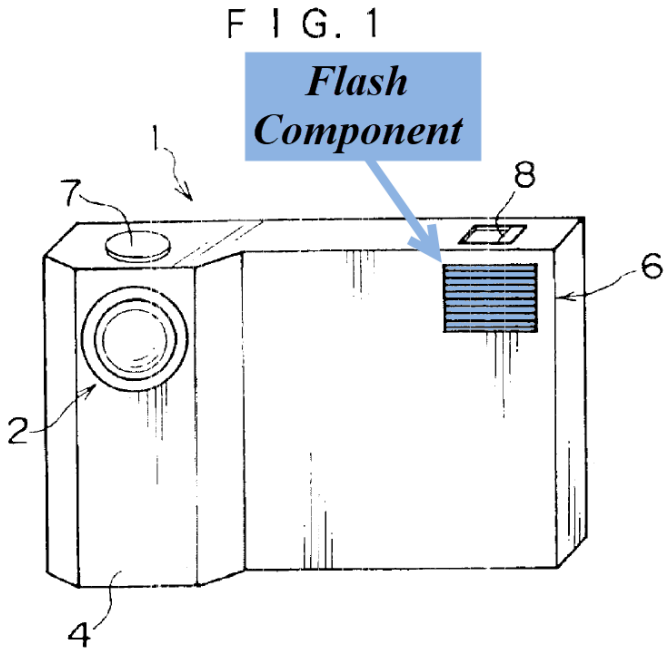

Likewise, Steinberg'073 describes a flash unit **26** regulated by a multiprocessor **12**. APPLE-1007, 3:66-4:48, Figures 1-2. The component arrangement of Hyodo and Steinberg'073 is consistent with the plain claim language and the '928 Patent's specification, which merely implicates a typical/conventional flash. APPLE-1003, ¶¶42 (citing APPLE-1001, 10:16-32; APPLE-1017, APPLE-1019), 76, 112.

Next, the Hyodo-Okawa-Steinberg'073 combination further provides the feature of "selecting a flash level value representing a flash intensity for [the] flash component based on the second focal point." APPLE-1003, ¶¶107-113. For example, as previously discussed (*see* pp. 14-15, *supra*), the disclosure of Steinberg'073 "provide[s] an improved digital camera having provision for determining optimum flash energy for illumination of a selected area of an image." APPLE-1007, 2:30-33; *see also id*., 1:5-10, 2:60-3:14. The approach described by Steinberg'073 includes enabling a low-energy pre-flash, performing an exposure analysis based on pixel output during the pre-flash, and deriving a final flash energy value for correct exposure of the image from the exposure analysis. *See*, *e.g*., APPLE-1007, 2:60-3:14; *see also id*., Abstract, 4:28-48 ("When sufficient light for an analysis is provided by a flash, the processor scales the flash energy level to determine an estimated flash energy level for correct exposure and the camera takes the picture at this energy level.") (reference numbers omitted), 5:10-6:4; APPLE-1003, ¶¶72, 110-111.

As explained by Petitioner's expert, in the context of Steinberg's disclosure, a POSITA would have understood and appreciated that flash intensity and flash energy are proportional concepts. APPLE-1003, ¶113 (citing APPLE-1036). Accordingly, the claimed feature of "select[ing] a flash level value representing a flash intensity for the flash component," would have at least been rendered obvious

in view of Steinberg's disclosure of calculating an optimum flash energy level. APPLE-1003, ¶113.

As was also discussed (*see* pp. 14-15, *supra*), the flash-energy calculation of Steinberg'073 is derived from analysis of a pixel sampling that is over-weighted with respect to the primary subject of the image. APPLE-1007, 6:59-7:22, 8:19-57, Figures 3-5. More specifically, Steinberg'073 explains that "a particular area of the image can be over sampled in order to weight it as <u>more important</u> in determining what is a correct exposure." APPLE-1007, 8:51-54. In the context of Hyodo's camera, the "more important" and, therefore, over-weighted portion of the image would be the second focal point selected by the user via interaction with the touchscreen display. APPLE-1003, ¶111; *see also* Elements 7[b]-7[c], *supra*. As such, the feature of calculating flash level "based on the second focal point" of the image is at least rendered obvious. APPLE-1003, ¶¶110-113.

A POSITA would have been motivated to integrate the above-discussed teachings of Steinberg'073 regarding flash energy calculation into Hyodo's camera. APPLE-1003, ¶112. **First**, a POSITA would have been motivated to pursue this combination to enable control of flash energy based on the user-selected second focal point. APPLE-1003, ¶112. As would have been appreciated by a POSITA, this modification would have leveraged the existing components of Hyodo's camera (*e.g.*, the flash, image sensor, and CPU) to produce images of higher quality (*i.e.*,

images with proper lighting and exposure at the focal point identified by the user). APPLE-1003, ¶112. **Second**, a POSITA would have recognized that the approach to flash control described by Steinberg'073 was particularly desirable in terms of conserving battery power and space by utilizing a single flash capacitor and a low-energy pre-flash. APPLE-1003, ¶112 (citing APPLE-1007, 1:38-2:26, 2:30-59; APPLE-1017, APPLE-1024).

As further proof that the Hyodo-Okawa-Steinberg'073 combination yields the '928 Patent's claimed flash-adjustment feature, Hyodo describes an auto-exposure routine where CPU **38** determines a "photometric value" corresponding to the focal point established by the user's touch. APPLE-1005, 4:61-5:21. As would have been understood by a POSITA, the term "photometric value" refers to a measure of luminance or brightness. APPLE-1003, ¶109. The POSITA, therefore, would have been prompted to utilize this same value to enable Hyodo's auto-flash functionality—*i.e.*, a photometric value above a predetermined threshold would disable flashing part **6**, and *vice versa* to trigger the flash. APPLE-1003, ¶109. More specifically, a POSITA motivated to fill in the missing details of Hyodo's suggestion of auto-flash functionality would have recognized that a measure of luminance could be leveraged as an indicator for activating/deactivating flashing part **6**. APPLE-

1003, ¶109. Under BRI[9], disabling flashing part **6** when there is sufficient luminance, as determined by CPU **38** based on the focal-point-specific photometric value, corresponds to a selection of "a flash level value" of zero representing a null "flash intensity." This is demonstrated by Patent Owner's infringement allegations in the co-pending litigation, which state: "Conversely, when the user presses-and-holds a bright location in the exact same displayed image, the flash will not activate when taking a picture in 'auto' flash mode." APPLE-1035, p.22; *see also* APPLE-1034, 143 ("the flash will not go off if the user takes a picture after selecting a sufficiently bright location of the image as a second focal point").

Petitioner acknowledges the applicant's arguments during prosecution that "Hyodo disclose[s] that a CPU . . . performs calculations for 'auto flashing,' but does

[9] Assertion of this interpretation by Petitioner under the BRI standard of claim construction flows from Patent Owner's broad allegations of infringement and therefore should not be interpreted as concession of its propriety under the narrower *Phillips* standard. It is well established that these differing approaches, in certain circumstances, may lead to different construction of the same terms. *See*, *e.g.*, *PPC Broadband*, *Inc. v. Corning Optical Communs. RF, LLC*, 815 F.3d 734, 740 (Fed. Cir. 2016); Office Patent Trial Practice Guide, 77 Fed. Reg. 48756, 48766 (Aug. 14, 2012).

not disclose . . . that a flash intensity is 'based on the second focal point.'" APPLE-1002, 47-48. However, the argument raised in this Petition concerning Hyodo's calculation of a photometric value at the user-selected second focal point, and the obviousness of using this value as a trigger for the auto-flash was not addressed during prosecution. This argument warrants consideration by the Board, not only because it is new and distinct from that which the Examiner considered during prosecution, but also in view of Patent Owner's broad allegations of infringement against Petitioner.

7[e]: "capturing the image, based on the flash level value, in response to a second type of user input on the touchscreen display, the second type of user input being different than the first type of user input"

The Hyodo-Okawa-Steinberg'073 combination provides Element 7[e]. APPLE-1003, ¶¶77, 83-84, 86, 90, 109, 114-116. **First**, this combination provides the feature of "capturing the image." APPLE-1003, ¶¶83-84 (citing APPLE-1017), 115. For example, Hyodo discloses that CPU **38** controls the image capturing circuits (*e.g.*, CCD **44**, CDS circuit **46**, and A/D converter **48**) of the camera in response to user input from touch panel **12** and/or shutter release button **7**. *See*, *e.g.*, APPLE-1005, 3:28-30, 3:66-4:43, 4:55-67. Okawa and Steinberg include similar disclosures. *See*, *e.g.*, APPLE-1006, [0043] ("the picture taking process is conducted"); APPLE-1007, 6:3-4 ("The picture is then taken with this estimated final flash energy.").

Second, the Hyodo-Okawa-Steinberg'073 combination provides that the image is captured "based on the flash level value," as claimed. APPLE-1003, ¶116. As previously discussed, Steinberg'073 describes a flash energy calculation weighted heavily on a selected portion of the image. *See* Element 7[d], *supra*. Steinberg'073 then also explains that a voltage for achieving the calculated flash energy is determined and applied to the flash capacitor to "take[] the picture at [the] energy level." APPLE-1007, 4:44-55, 11:18-65, Figure 2; APPLE-1003, ¶116.

It would have been obvious to incorporate the concept of capturing the image at the calculated flash energy level, as taught by Steinberg'073, into Hyodo's camera. APPLE-1003, ¶116. For example, a POSITA would have viewed this as a natural step towards achieving a properly lit and exposed image, a benefit of calculating the optimum flash energy. APPLE-1003, ¶116. In other words, a POSITA would have appreciated that the flash should be activated to provide the calculated flash energy at the time of image capture to properly expose the image. APPLE-1003, ¶116. Thus, the combination of Hyodo and Steinberg'073 in this regard would have amounted to no more than the predictable result of using a known technique (Steinberg's flash energy calculation and image capture at the flash energy level) to improve or simply render operable a similar known device (Hyodo's camera with auto-flash functionality). *KSR*, 550 U.S. at 416-17; MPEP §2143 I(A), I(C); APPLE-1003, ¶116.

Hyodo's disclosure further suggests image capture "based on the flash level value." APPLE-1003, ¶116. In keeping with an example previously discussed at Element 7[d], when Hyodo's CPU **38** deactivates flashing part **6** based on a photometric value indicating sufficient luminance at the user-selected second focal point, a reasonable inference is that the image is captured by CPU **38** using the flash level value of zero. APPLE-1003, ¶¶109, 116; *In re Preda*, 401 F.2d 825, 826, 159 USPQ 342, 344 (CCPA 1968)'") (the disclosure of a reference includes reasonable inferences); *Perfect Web Techs*., *Inc*. *v*. *InfoUSA*, *Inc*., 587 F.3d 1324, 1329 (Fed. Cir. 2009) (". . . an analysis of obviousness . . . may include recourse to logic, judgment, and common sense . . .").

Third, the Hyodo-Okawa-Steinberg'073 combination provides that the image is captured "in response to a second type of user input on the touchscreen display, the second type of user input being different than the first type of user input." APPLE-1003, ¶115. As to the claimed first and second types of user input, the '928 Patent's specification describes a preferred embodiment featuring different tap gestures—*i.e*., single tap versus double tap. *See* APPLE-1001, 12:35-45, cl.16. Similarly, Hyodo describes different types of user input in terms of different pressures exerted on touch panel **12**. APPLE-1003, ¶115. In particular, Hyodo describes <u>a first type of user input</u> as pressure on touch panel **12** below a predetermined threshold (**Touch T1**) for establishing a second focal point of the

image (*see* Element 7[b], *supra*) and a second type of user input as pressure on touch panel **12** above a predetermined threshold (**Touch T2**) for releasing the shutter and capturing the image. *See* APPLE-1005, 5:56-6:67; APPLE-1003, ¶¶77, 86, 90, 114-115. As summarized by Hyodo, "the image-recording preparation (with **T1**) and image-recording (with **T2**) are designated by the different pressures applied on the touch panel **12**." APPLE-1005, 6:63-66. This same interpretation and mapping between Hyodo's disclosure and the '928 Patent's claims was raised by the examiner during prosecution and never traversed by the applicant. In IPR, "the prosecution history, while not literally within the patent document, serves as intrinsic evidence for purposes of claim construction." *Tempo Lighting*, *Inc. v. Tivoli*, *LLC*, 742 F.3d 973, 977 (Fed. Cir. 2014).

Claim 8:

8[pre]: "The method of claim 7"

See Elements 7[pre]-7[e], *supra*.

8[a]: "wherein focusing the lens component on the second focal point includes generating a set of coordinates for the second focal point"

The Hyodo-Okawa-Steinberg'073 combination provides Element 8[a]. APPLE-1003, ¶¶77, 90-93. For example, Hyodo describes how touch panel **12** (mapped as part of the "touchscreen display" at Element 7[a]), "can output a signal indicating a position (XY coordinate values) of a touched portion on a panel surface[.]" APPLE-1005, 3:31-38. Hyodo then further explains how this position

information is utilized by CPU **38** to generate a focus evaluation value for driving taking lens **40** (mapped to the claimed "lens component" at Element 7[a]) into a focused position with respect to the second focal point designated by the user's touch. *See* APPLE-1005, 4:55-67, 5:22-33; *see also* Element 7[b], *supra*. Hyodo's Figure 3 (annotated below) illustrates to a POSITA how the XY coordinate values for the second focal point corresponding to the user's touch—*i.e.*, the first type of user input (*see* Element 7[b], *supra*)—are sent from touch panel **12** to CPU **38**. APPLE-1003, ¶93.

F I G. 3

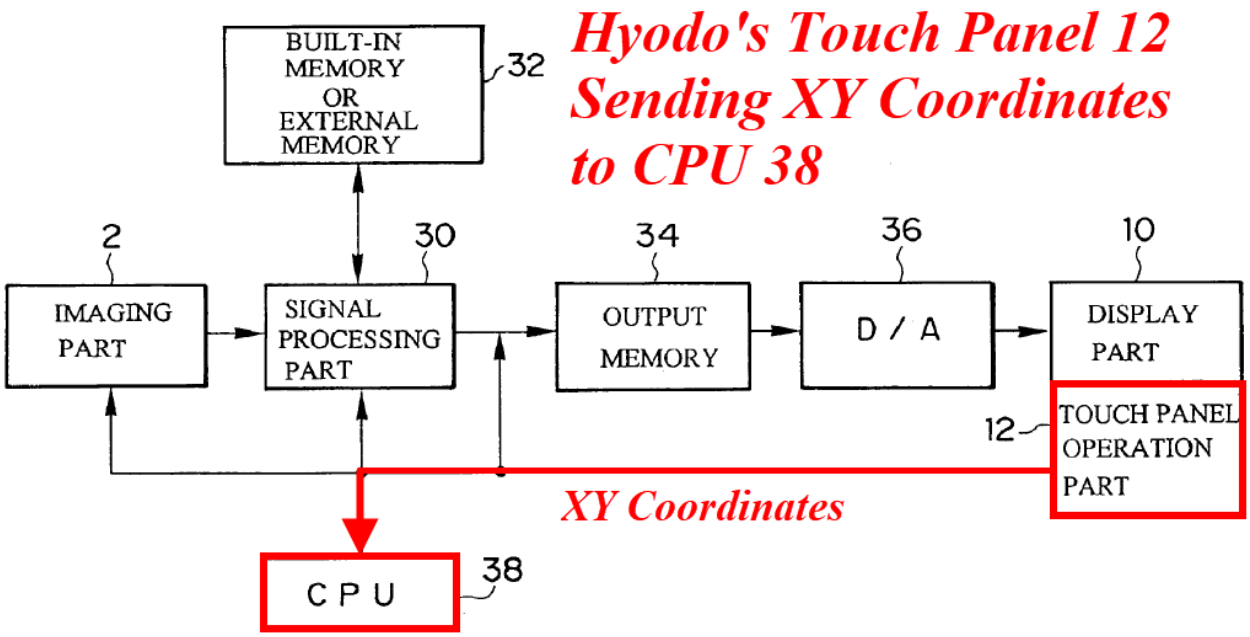

Claims 10-11:

Claims 10-11 are substantially similar to claims 7-8, merely reciting the same series of steps in Beauregard[10] form. Thus, like claims 7-8, the obviousness of claims 10-11 in view of the Hyodo-Okawa-Steinberg'073 combination is demonstrated by the analysis articulated above. Identification of the relevant discussion for each step is provided below.

> ***10[pre]: "A non-transitory computer readable storage medium storing instructions, the instructions[11] when executed by one or more processors cause the one or more processors to perform a method comprising"***

See Element 7[pre], *supra*.

> ***10[a]: "displaying, on a touchscreen display, an image having a first focal point, the image being provided by a lens component"***

---

[10] Beauregard claims are typically treated as method claims. *See*, *e.g.*, *Digital-Vending Services Intern.*, *LLC v. University of Phoenix*, *Inc.*, 672 F.3d 1270, 1275 n.1 (Fed. Cir. 2012); *accord Amazon.com, Inc. et al.* v. *Avago Technologies General IP (Singapore) Pte. Ltd.*, IPR2017-00963, Paper 14 at 14 (PTAB Sept. 13, 2017).

[11] Disclosure of a processor performing a claimed function at least renders obvious execution of corresponding instructions. Indeed, as would have been known by a POSITA, one of the typical uses of a processor at the relevant time period (and now) was to "control[] interpretation and execution of instructions." APPLE-1003, ¶88 (citing APPLE-1022).

See Element 7[a], *supra*.

10[b]: "selecting a second focal point for the image in response to a first type of user input on the touchscreen display, the second focal point corresponding to a location on the image displayed on the touchscreen display"

See Element 7[b], *supra*.

10[c]: "focusing the lens component from the first focal point to the second focal point while the image is being displayed"

See Element 7[c], *supra*.

10[d]: "selecting a flash level value representing a flash intensity for a flash component based on the second focal point"

See Element 7[d], *supra*.

10[e]: "capturing the image, based on the flash level value, in response to a second type of user input on the touchscreen display, the second type of user input being different than the first type of user input"

See Element 7[e], *supra*.

11[pre], 11[a]: "The storage medium of claim 10, wherein focusing the lens component on the second focal point includes generating a set of coordinates for the second focal point"

See Elements 10[pre]-10[e] (citing 7[pre]-7[e]), 8[a], *supra*.

B. [GROUND 1-B]—Claim 13 is rendered obvious by Hyodo in view of Okawa, Steinberg'073, and Abe

Overview of Abe

Abe is directed to a digital camera featuring "an image signal processor that carries out a white balance process on image signals generated by an imaging device." APPLE-1009, 1:8-10; *see also id*., 1:20-47, 2:9-11; *see also* APPLE-1003, ¶117. More specifically, Abe's imaging device includes a "white balance processing block" that performs a white balance process based on, among other factors, the distance between the device and the object focal point ("the object distance"). APPLE-1009, 1:38-47.

The object distance is derived from the auto-focus system. APPLE-1003, ¶¶119-120. Abe's technique determines the relative location of a focus optical system **41F** housed in the lens unit **68** after auto-focus, and correlates this relative distance to an object distance using a lookup table. *See generally* APPLE-1009, 3:6-64; *see also id*., 2:9-11, 9:65-10:9, Figure 1; APPLE-1003, ¶¶119-120. The object distance is then fed to a gain calculation block **24**, which selects corresponding Rg (red) and Bg (blue) gain values utilized by white balance processing block **23** to modify the signal components of the image. *See* APPLE-1009, 4:33-57 (white balance is performed based on gain values), 6:15-29 (gain values are selected based on object distance), Figure 2; *see also generally id*. 6:30-9:39 (discussing the step-

by-step algorithm for utilizing object distance and other parameters for white balancing), Figures 4-7; APPLE-1003, ¶121.

Claim 13:

13[pre]: "The storage medium of claim 10"

See Elements 10[pre]-10[e] (citing 7[pre]-7[e]).

13[a]: "wherein the instructions when executed by the one or more processors cause the one or more processors to perform a method further comprising modifying a white balance setting value for the image based on the second focal point"

The Hyodo-Okawa-Steinberg'073-Abe combination provides Element 13[a]. APPLE-1003, ¶¶118-124. For example, Hyodo states: "CPU **38** . . . also controls the gain control amplifier according to a calculated RB gain value so as to set the white balance." APPLE-1005, 4:67-5:6; *see also id*., 4:61-67. Similar to Hyodo, Abe also describes a processor that facilitates white balance adjustment by calculating red-blue (RB) gain for the image. *See*, *e.g*., APPLE-1009, 4:33-41.

As discussed above (*see* pp. 47-48, *supra*), Abe further provides specific details regarding how selection of this RB gain value accounts for the distance to an object at the focal point of the image. *See* APPLE-1009, 1:38-47, 2:9-11, 3:6-64, 9:65-10:9, Figure 1. Gain value adjustment, as disclosed by Hyodo and Abe, is consistent with the relevant disclosure of the '928 Patent's specification, which states: "White balance control may refer to the adjustment of the relative amounts of red, green, and blue primary colors in an image[.]" APPLE-1001, 10:10-15. Thus,

the Hyodo-Okawa-Steinberg'073-Abe combination provides the claimed feature of "wherein the instructions when executed by the one or more processors[12] cause the one or more processors to perform a method further comprising modifying a white balance setting value for the image." APPLE-1003, ¶¶122 (citing APPLE-1025), 124.

Moreover, a POSITA would have gleaned from Abe's disclosure in the context of Hyodo's camera that the white balance setting would be modified "based on the second focal point" (as claimed). APPLE-1003, ¶¶122, 124. As discussed above (*see* pp. 47-48, *supra*), Abe describes an approach where RB gain is determined with respect to the distance of the object in focus, as gleaned from the position of a focus optical system **41F** housed in a lens unit **68** after auto-focus. *See generally* APPLE-1009, 1:38-47, 2:9-11, 3:6-64, 9:65-10:9, Figure 1. As such, the object distance utilized in Abe's approach for determining RB gain would correspond to the portion of the image placed in focus by Hyodo's auto-focus routine, which is responsive to the second focal point selected by the user. APPLE-1003, ¶122; *see also* analysis at Elements 7[a]-7[c]. In short, the user's selection of

[12] Disclosure of a processor performing a claimed function at least renders obvious execution of corresponding instructions. *See* fn9, *supra*.

a second focal point affects the distance to the object placed in focus and, therefore, also affects the RB gain.

A POSITA would have been motivated to integrate Abe's teachings of white balancing based on a focal point into Hyodo's camera. APPLE-1003, ¶¶118, 123. In fact, a POSITA would have sought out Abe's disclosure to fill in the missing details of Hyodo. APPLE-1003, ¶118. That is, a POSITA would have taken the suggestion of white balancing in Hyodo as a cue to find and incorporate the specific functionality described by Abe. APPLE-1003, ¶118; *see also* MPEP 2141(III) (the teaching-suggestion-motivation test remains a valid rationale in support of an obviousness conclusion) (citing *KSR*, 550 U.S. at 418-19). Moreover, a POSITA would have viewed incorporation of Abe's technique for controlling automatic white balance as advantageous, understanding that this would yield enhanced image quality without additional user input. APPLE-1003, ¶123 (citing APPLE-1009, 9:40-42 ("In the above embodiment, it is possible to carry out an adequate white balance without user intervention[.]")).

V. PAYMENT OF FEES – 37 C.F.R. § 42.103

Apple authorizes the Patent and Trademark Office to charge Deposit Account No. 06-1050 for the fee set in 37 C.F.R. § 42.15(a) for this Petition and further authorizes payment for any additional fees to be charged to this Deposit Account.

VI. CONCLUSION

Petitioner request *Inter Partes* Review of these Challenged Claims pursuant to Grounds 1-A through 1-B.

VII. MANDATORY NOTICES UNDER 37 C.F.R § 42.8(a)(1)

A. Real Party-In-Interest Under 37 C.F.R. § 42.8(b)(1)

Petitioner, Apple Inc., is the real parties-in-interest.

B. Related Matters Under 37 C.F.R. § 42.8(b)(2)

Apple is filing one additional petition addressing claims 7, 8, 10, 11, and 13 of the '928 Patent concurrently with the filing of this Petition. The '928 Patent is the subject of a civil action in Case No. 3:17-CV-02403 at the United States District Court for the Southern District of California.

C. Lead And Back-Up Counsel Under 37 C.F.R. § 42.8(b)(3)

Apple provides the following designation of counsel.

Lead Counsel	Backup counsel
W. Karl Renner, Reg. No. 41,265 Fish & Richardson P.C. 3200 RBC Plaza 60 South Sixth Street Minneapolis, MN 55402 Tel: 202-626-5070 Fax: 877-769-7945 Email: IPR39521-0047IP1@fr.com	Thomas A. Rozylowicz, Reg. No. 50,620 Timothy W. Riffe, Reg. No. 43,881 Fish & Richardson P.C. 3200 RBC Plaza 60 South Sixth Street Minneapolis, MN 55402 Tel: 202-626-5070 Fax: 877-769-7945 PTABInbound@fr.com

D. Service Information

Please address all correspondence and service to the address listed above. Petitioner consents to electronic service by email at IPR39521-0047IP1@fr.com (referencing No. 39521-0047IP1 and cc'ing PTABInbound@fr.com, axf-ptab@fr.com, rozylowicz@fr.com and riffe@fr.com.

Respectfully submitted,

Dated 6/20/2018

/W. Karl Renner/
W. Karl Renner, Reg. No. 41,265

Dated 6/20/2018

/Thomas A. Rozylowicz/
Thomas A. Rozylowicz, Reg. No. 50,620

Fish & Richardson P.C.
3200 RBC Plaza, 60 South Sixth Street
Minneapolis, MN 55402
T: 202-626-5070
F: 877-769-7945

(Control No. IPR2018-01277)

Attorneys for Petitioner

CERTIFICATION UNDER 37 CFR § 42.24

Under the provisions of 37 CFR § 42.24(d), the undersigned hereby certifies that the word count for the foregoing Petition for *Inter partes* Review totals 9,786 words, which is less than the 14,000 allowed under 37 CFR § 42.24.

Dated: 6/20/2018

/Thomas A. Rozylowicz/

W. Karl Renner, Reg. No. 41,265
Thomas A. Rozylowicz, Reg. No. 50,620
Timothy W. Riffe, Reg. No. 43,881
Fish & Richardson P.C.
3200 RBC Plaza, 60 South Sixth Street
Minneapolis, MN 55402
T: 202-626-5070
F: 877-769-7945

Attorneys for Petitioner

CERTIFICATE OF SERVICE

Pursuant to 37 CFR §§ 42.6(e)(4)(i) *et seq.* and 42.105(b), the undersigned certifies that on June 20, 2018, a complete and entire copy of this Petition for *Inter partes* Review and all supporting exhibits were provided via Federal Express, to the Patent Owner by serving the correspondence address of record as follows:

Qualcomm /Norton Rose Fulbright US LLP
2200 Ross Avenue, Suite 3600
Dallas TX 75201-7932

/Diana Bradley/

Diana Bradley
Fish & Richardson P.C.
60 South Sixth Street, Suite 3200
Minneapolis, MN 55402
(858) 678-5667