Trials@uspto.gov
571.272.7822

Paper No. 12
Entered: June 12, 2019

UNITED STATES PATENT AND TRADEMARK OFFICE

BEFORE THE PATENT TRIAL AND APPEAL BOARD

ASM IP HOLDING B.V.,
Petitioner,

v.

KOKUSAI ELECTRIC CORP.,
Patent Owner.

Case IPR2019-00375
Patent 6,576,063 B2

Before KRISTINA M. KALAN, MICHELLE N. WORMMEESTER, and SHELDON M. MCGEE, *Administrative Patent Judges*.

MCGEE, *Administrative Patent Judge*.

DECISION
Institution of *Inter Partes* Review
35 U.S.C. § 314

I. INTRODUCTION

A. Background

ASM IP Holding B.V. ("Petitioner") filed a Petition requesting an *inter partes* review of claims 1–16 of U.S. Patent No. 6,576,063 B2 (Ex. 1001, "the '063 patent"). Paper 2 ("Pet."). Kokusai Electric Corp. ("Patent Owner") filed a Preliminary Response to the Petition. Paper 8 ("Prelim. Resp."). Petitioner, with Board authorization (Paper 9), filed a Reply to Patent Owner's Preliminary Response. Paper 10 ("Reply"). Patent Owner, with Board authorization, filed a Sur-Reply to Petitioner's Reply. Paper 11 ("Sur-Reply").

We have jurisdiction under 35 U.S.C. § 314, which provides that an *inter partes* review may not be instituted "unless . . . there is a reasonable likelihood that the petitioner would prevail with respect to at least 1 of the claims challenged in the petition." 35 U.S.C. § 314(a). Upon consideration of the Petition, the Preliminary Response, the Reply, the Sur-Reply, and the evidence of record, we determine Petitioner has shown a reasonable likelihood that it would prevail in showing the unpatentability of at least one of claims 1–16. Accordingly, we institute an *inter partes* review of claims 1–16 of the '063 patent.

B. Related Proceedings

The parties identify the following proceeding as involving the '063 patent: *Hitachi Kokusai Electric Inc. v. ASM International, N.V.*, C.A. No. 17-cv-06880 (N.D. Cal.). Pet. 74; Paper 3, 3 (Petitioner's Supplemental Mandatory Notice: Related Matters); Paper 6, 1 (Patent Owner's Mandatory Notices).

C. The ’063 Patent (Ex. 1001)

The ’063 patent, titled “Apparatus and Method for Use in Manufacturing a Semiconductor Device,” issued on June 10, 2003. Ex. 1001, at [54], [45]. The ’063 patent relates to “[a]n apparatus for use in manufacturing a semiconductor device” that “comprises a reaction chamber wherein one or more substrates to be treated are disposed, a plasma source arranged outside of and in proximity to the reaction chamber, an active species supply port for providing active species generated by the plasma source to the reaction chamber . . . and an exhaust port.” *Id.* at [57].

The ’063 patent indicates that “[b]y arranging the plasma source outside of and in proximity of the reaction chamber, the substrates can be treated without metal contamination and damages by the plasma,” and “more than one substrate can be treated by supplying the active species flowing parallel to the substrates, thereby enhancing the throughput.” *Id.* at 4:10–15.

Figure 5 of the ’063 patent is reproduced below:

FIG.5

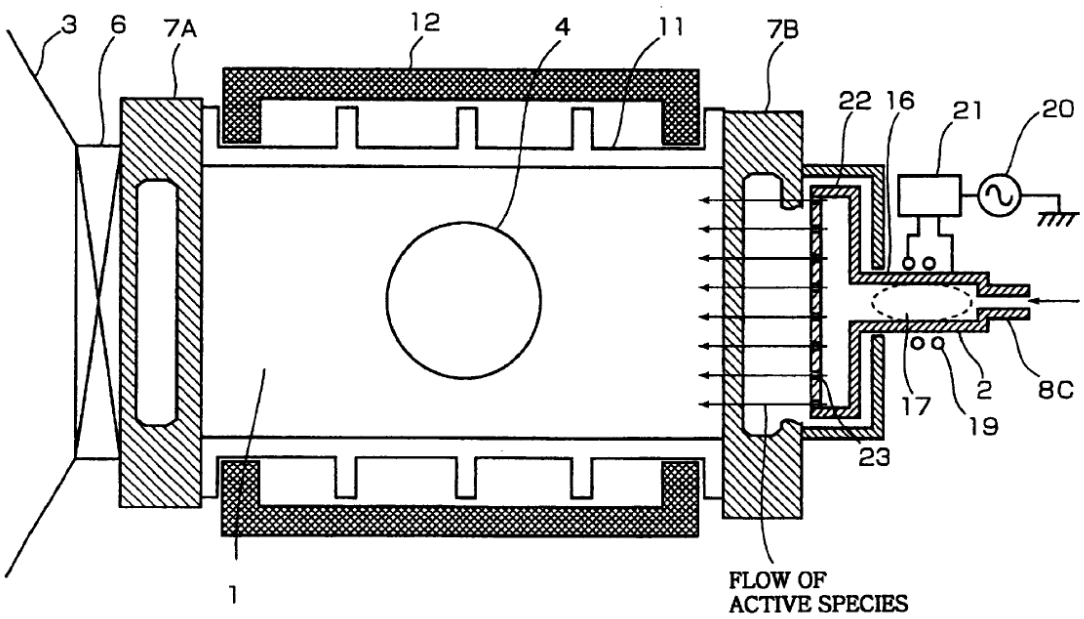

Figure 5 of the ’063 patent, above, “represents a cross-sectional plan view . . . of one of the reaction chambers 1 . . . and one of the plasma sources 2 of the semiconductor manufacturing apparatus shown in FIGS. 4A and 4B.” *Id.* at 5:63–67. The Specification provides that during a post-deposition process set forth in Figure 5, a “plasma 17 is generated from the oxygen gas in the discharge tube 16 by the plasma discharge induced by the alternating electric fields. Ions, radicals and ozone (O_3) are generated from the oxygen gas by the plasma discharge, among which radicals and ozone are used in the treatment.” “[P]lasma source 2 is separated from the reaction chamber 1” so that the wafer 4 is not “damaged or attacked by the collision of ions.” *Id.* at 8:10–11, 31–39.

D. Challenged Claims

Of challenged claims 1–16, claims 1, 10, and 16 are independent. Claim 1 is representative and is reproduced below:

> 1. [pre] A semiconductor manufacturing apparatus, comprising:
>
> [a] a reaction chamber in which one or more substrates to be processed are disposed;
>
> [b] a plasma source arranged outside of and in proximity to the reaction chamber;
>
> [c] an active species supply port for providing active species generated by the plasma source to the reaction chamber; and
>
> [d] an exhaust port provided at a substantially opposite side to the active species supply port,
>
> [e] wherein the substrates are disposed between the active species supply port and the exhaust port and the active species flow substantially parallel to the surfaces of the substrates and
>
> [f] wherein two or more substrates are simultaneously processed in the reaction chamber.

Ex. 1001, 13:12–29 (bracketed annotations and formatting added).

E. Asserted Grounds of Unpatentability

Reference(s)	**Basis**	**Claim(s) Challenged**
Shimada[1]	§ 102(b)	1, 3, 6, 10, 11, 15
Shimada	§ 103(a)	5
Shimada and Noble[2]	§ 103(a)	3, 7, 11, 12
Watanabe[3] and Sivaramakrishnan[4]	§ 103(a)	1, 2, 4, 8–10, 13, 14, 16

[1] Japanese Unexamined Pat. App. No. H-251391, published September 28, 1993 (Ex. 1005).
[2] U.S. Pat. No. 6,450,116 B1, issued September 17, 2002 (Ex. 1008).
[3] Japanese Unexamined Pat. App. No. H7-94419, published April 7, 1995 (Ex. 1006).
[4] European Pat. App. No. 0 843 347 A2, published May 20, 1998 (Ex. 1011).

Reference(s)	Basis	Claim(s) Challenged
Watanabe, Sivaramakrishnan, and Kimura[5]	§ 103(a)	9, 14

Petitioner relies on the Declaration of Dr. Alexander Glew (Ex. 1003) in support of its contentions.

II. ANALYSIS

A. Claim Construction

We apply the same claim construction standard applied in civil actions under 35 U.S.C. § 282(b), which is articulated in *Phillips v. AWH Corp.*, 415 F.3d 1303 (Fed. Cir. 2005). *See Changes to the Claim Construction Standard for Interpreting Claims in Trial Proceedings Before the Patent Trial and Appeal Board*, 83 Fed. Reg. 51,340 (Oct. 11, 2018) (applicable to *inter partes* reviews filed on or after November 13, 2018). The parties agree that a *Phillips*-type construction is appropriate for this proceeding. Pet. 4; Prelim. Resp. 3. Under *Phillips*, claim terms are afforded "their ordinary and customary meaning." *Phillips*, 415 F.3d at 1312. "[T]he ordinary and customary meaning of a claim term is the meaning that the term would have to a person of ordinary skill in the art in question at the time of the invention." *Id.* at 1313. Only terms that are in controversy need to be construed, and then only to the extent necessary to resolve the controversy.

[5] *EXAFS Studies of the Difference in Local Structure of Various Tantalum Oxide Capacitor Films*, 354 MATERIALS RESEARCH SOC'Y SYMPOSIUM PROCEEDINGS. 489 (1995) (Ex. 1007).

Vivid Techs., Inc. v. Am. Sci. & Eng'g, Inc., 200 F.3d 795, 803 (Fed. Cir. 1999).

Here, Petitioner proposes a construction for the phrase "a distance where the concentration of the active species . . . becomes substantially constant," which is recited in dependent claims 3 and 11. Pet. 4–9. Specifically, Petitioner argues that "a distance where the concentration of the active species . . . becomes substantially constant" should "encompass distances downstream of the distance from the plasma source at which the concentration of ions decreases to zero." *Id.* at 9. Patent Owner does not contest Petitioner's construction of "a distance," but does discuss the "active species" portion of the term in its Preliminary Response. Prelim. Resp. 4–6.

Patent Owner proposes that the only term that needs to be construed is "active species," which is recited in independent claims 1, 10, and 16, and in several dependent claims. *Id.* Specifically, Patent Owner asserts that "'active species,' as the term is used in the '063 Patent, and as acknowledged by Petitioner and its expert, means an excited gas that includes at least radicals and ions." *Id.* at 6.

Petitioner replies that the claimed "active species" includes "radicals and/or ions," and, in the context of the claims, includes only those species that are supplied to the reaction chamber. Reply 1–2. Petitioner argues that Patent Owner's construction of "active species" relies on portions of the Specification that relate to active species formed in the plasma source, rather than active species that enter the reaction chamber. *Id.* at 2. Petitioner agrees with Patent Owner that "the 'active species' formed when a plasma is generated <u>in a plasma source</u> may include both ions and radicals," but argues that "[t]he specification makes it clear that not all of the active species that

are generated in the plasma source reach the reaction chamber." *Id.* Rather, Petitioner points to a preferred embodiment of the '063 patent and asserts that "the specification of the '063 patent teaches that the active species supplied to the reaction chamber include only radicals (and not ions) *when the plasma source is separated from the reaction chamber by a certain distance*." *Id.* at 2–3 (emphasis added). Petitioner also points to the '063 patent Specification's discussion[6] of Figure 3—a prior art down-flow type apparatus—wherein the phrase "neutral active species" is used to describe the active species "provided to the wafer surface in the form of a down-flow." *Id.* at 4–5. According to Petitioner, this reference to "neutral active species" "would require the '063 patent['s] use of the term 'neutral active species' to include 'neutral ions,' which is nonsense because ions are not neutral, they are charged." *Id.* at 5.

In its Sur-Reply, Patent Owner states that Petitioner, in its Petition, took the position that the term "'active species' includes ions **<u>and</u>** radicals, and applied this meaning throughout its Petition," but then changed its position in its Reply, "propos[ing] that active species need only have 'radicals and/**<u>or</u>** ions.'" Sur-Reply 1. Patent Owner also asserts that Petitioner improperly "attempt[s] to read a feature of a preferred embodiment into the claims," and misconstrues dependent claims 3 and 11 to require no ions to reach the wafer as belied by Petitioner's own evidence. *Id.* at 2–3.

Patent Owner also points to the Specification, which "explains that '[i]ons, radicals[,] and ozone' are in the plasma discharge, even though only

---

[6] We observe that this discussion appears in the '063 patent at 2:62–63, not at 3:9 as Petitioner avers.

'the radicals and ozone are used in the [carbon removal] treatment'" and "clarifies the radicals of the active species 'react[] with the wafer,' confirming active species include more than just radicals." *Id.* at 3 (citing Ex. 1001, 8:33–37, 11:2). Patent Owner asserts further that dependent "claims 3 and 11 would be inoperable if no ions were introduced into the chamber" because each require the concentration of active species generated by the plasma to "become[] substantially constant." *Id.* at 4. Thus, Patent Owner argues that "ions must necessarily be supplied into 'the chamber'" after which the concentration of those active species "becomes substantially constant." *Id.* Patent Owner also takes issue with Petitioner's assertion regarding "neutral ions" stating that "if active species did not include at least both charged ions and neutral radicals, there would be no need to specify that the neutral components are provided to the wafer." *Id.* Finally, Patent Owner asserts that Petitioner is bound by its admission and that of its expert in this proceeding—presumably Petitioner's statement that "[i]t was understood that the active species in a plasma included ions and radicals" (Pet. 13[7], Reply 5)—and that "[t]o permit Petitioner to change its position after [Patent Owner's] reliance and adoption of it, would unduly prejudice Patent Owner" and violate Patent Owner's due process. *Id.* at 5.

Thus, Petitioner and Patent Owner have invited us to construe the term "active species." Upon review of the '063 patent Specification, the Petition, Preliminary Response, Reply, and Sur-Reply, and evidence of record in this proceeding, we construe the term "active species" as "species

[7] We note Petitioner's statement also appears at page 8 of the Petition in IPR2019-00364 and presents similar issues to those here.

generated by the plasma source, such as ions, radicals, and ozone." Our reasoning follows.

To properly interpret the meaning of a given claim term, our reviewing court instructs us to "look first to the intrinsic evidence of record, *i.e.*, the patent itself, including the claims, the specification and, if in evidence, the prosecution history" which collectively "is the most significant source of the legally operative meaning of disputed claim language." *Vitronics Corp. v. Conceptronic, Inc.*, 90 F.3d 1576, 1582 (Fed. Cir. 1996).

The claims themselves do not clarify the meaning of the term "active species" in isolation. Thus, to determine the meaning of the term "active species," we first turn to the Specification, because "'[c]laims must be read in view of the specification, of which they are a part.'" *Vitronics*, 90 F.3d 1576 at 1582. "[T]he specification is always highly relevant to the claim construction analysis. Usually, it is dispositive; it is the single best guide to the meaning of a disputed term." *Id.* Here, we find that, although the term "active species" is not defined, the Specification is nevertheless informative regarding the proper construction. In particular, it states that "the type of generated active species depends on the electron temperature of the plasma" and that "the ratio of the generated active species can be adjusted in a desired manner." Ex. 1001, 6:67–7:5. In one post-deposition process, "plasma 17 is generated from the oxygen gas in the discharge tube 16 by the plasma discharge induced by the alternating electric fields. Ions, radicals[,] and ozone (O_3) are generated from the oxygen gas by the plasma discharge, among which radicals and ozone are used in the treatment." *Id.* at 8:10–11, 31–35.

Extrinsic evidence may also be considered when necessary to assist in determining the proper construction of a given claim term. *Vitronics*, 90 F.3d 1576, 1583. Here, we note that Petitioner provides a plethora of extrinsic evidence that supports a construction of "active species" as "species generated by the plasma source, such as ions, radicals, and ozone." Ex. 1005 ¶ 2 ("This plasma contains a mixture of plasma gas ions, radicals, and electrons"); Ex. 1008, 5:42–45 ("In general, plasma sources generated by, for example, an energetic excitation of gaseous molecules consist of a plasma of charged ions, radicals, and electrons."); Ex. 1011, 5:50–52 ("[T]he remote plasma cleaning system is a microwave plasma system configured to produce and deliver a select species (such as fluorine, chlorine or other radicals) to the processing chamber. The remote plasma system energizes gases by microwave radiation to create a plasma with etching radicals."); Ex. 1018, 26 ("Plasma contains highly activated species *such as* electrons, ions, and radicals." (emphasis added)).

We emphasize that our construction focuses only on the term "active species," which is what the parties have asked us to construe. Prelim. Resp. 4; Paper 7, 2. In this regard, while Patent Owner correctly observes that the Specification indicates that ions may be one type of active species "generated from the oxygen gas by the plasma discharge" (Spec. 8:33–35), we are unpersuaded by Patent Owner's position that the term "active species," in isolation, must *necessarily* require the presence of ions. *See, e.g.*, Prelim. Resp. 4 (asserting that it "was well-known at the time of the '063 Patent [that] active species include at least both radicals and ions."). Thus, while we have been asked to construe the term "active species" to necessarily include ions, we decline to do so because we are not persuaded

that the evidence before us at this stage of the proceeding requires the presence of ions in the active species under all circumstances.

For purposes of this Decision, we determine that no other claim terms require an explicit construction at this time.

B. Relied Upon Prior Art

i. Shimada (Ex. 1005)

Shimada, titled "Plasma Processing Device for Semiconductor Wafers," relates to "a plasma processing device capable of allowing a process gas that generates plasma to flow evenly in the vertical direction with respect to semiconductor wafers held in a vertically stacked state and thereby performing uniform plasma processing on each of the plurality of semiconductor wafers." Ex. 1005, at [54], [57]. Shimada's Figure 1, reproduced below, discloses a plasma processing device:

(FIG. 1)

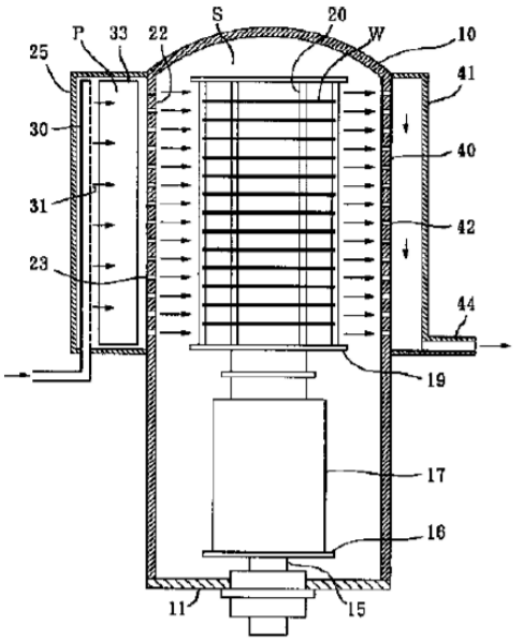

Shimada's Figure 1, above, is a "vertical cross-sectional view . . . of a plasma processing device for semiconductor wafers." *Id.* ¶ 8. Figure 1 shows a cylindrical processing vessel 10 that may be made of quartz, with a closed upper end and a cap plate 11 on an opened bottom end that can be freely opened and closed. *Id.* "On one side of the outer periphery of the processing vessel 10, a plasma generation vessel 25 made of quartz, for example, is provided integrally using a portion of the peripheral wall thereof as a partition wall 22 so as to divide a plasma generation space P with the partition wall 22." *Id.* ¶ 10. "Radical inlet ports 23 are then formed uniformly in the vertical direction in an area facing the entire vertical length of the wafer holding area in the partition wall 22 between the processing space S and the plasma generation space P." *Id.* "An exhaust port 41 is provided integrally on the outer periphery of the processing vessel 10 on the opposite side as the plasma generation vessel 25 using a portion of the peripheral wall thereof as a partition wall 40 so as to divide the exhaust path with the partition wall 40." *Id.* ¶ 15.

During operation of the plasma processing device, "the semiconductor wafers W to be processed are held in the wafer holding area inside the processing vessel 10 . . . and a process gas is supplied by the process gas supply pipe 30 while a high-frequency voltage is applied to the parallel plate type plasma generation electrode 33 so that plasma is generated by the process gas in the plasma generation space P." *Id.* ¶ 18. "The radicals of the process gas produced by the plasma are introduced into the processing space S from the radical inlet ports 23, and the target processing is achieved for the surfaces of the semiconductor wafers W by the action of these radicals." *Id.* ¶ 19. "[D]ue to the presence of the partition wall 22, ions do not penetrate

directly into the processing space S and affect the semiconductor wafers W." *Id.* ¶ 27.

ii. Noble (Ex. 1008)

Noble, titled "Apparatus for Exposing a Substrate to Plasma Radicals," discusses "a first reaction chamber adapted to generate a plasma comprising ions and radicals and a second reaction chamber coupled to the first reaction chamber and adapted to house a substrate at a [site] in the second reaction chamber" where "[t]he second reaction chamber is coupled to the first reaction chamber by an inlet member and radicals of the plasma flow through the inlet member into the second reaction chamber." Ex. 1008, at [54], [57]. Noble's remote plasma source generates "a plasma of charged ions, radicals, and electrons," the reactive portion of which "is comprised substantially of radicals," and "contemplates that substantially all ions present in the plasma at the plasma generation (with the radicals) are eliminated prior to coming in contact with [the] SiO_2 layer." *Id.* at 5:42–45, 6:1–6.

iii. Watanabe (Ex. 1006)

Watanabe, titled "Semiconductor Processing Device," discusses the use of "a film forming device or an etching device to perform uniform processing with high reproducibility." Ex. 1006, at [54], [57]. Watanabe's Figure 2, reproduced below, discloses a heating furnace of a CVD device:

(FIG. 2)

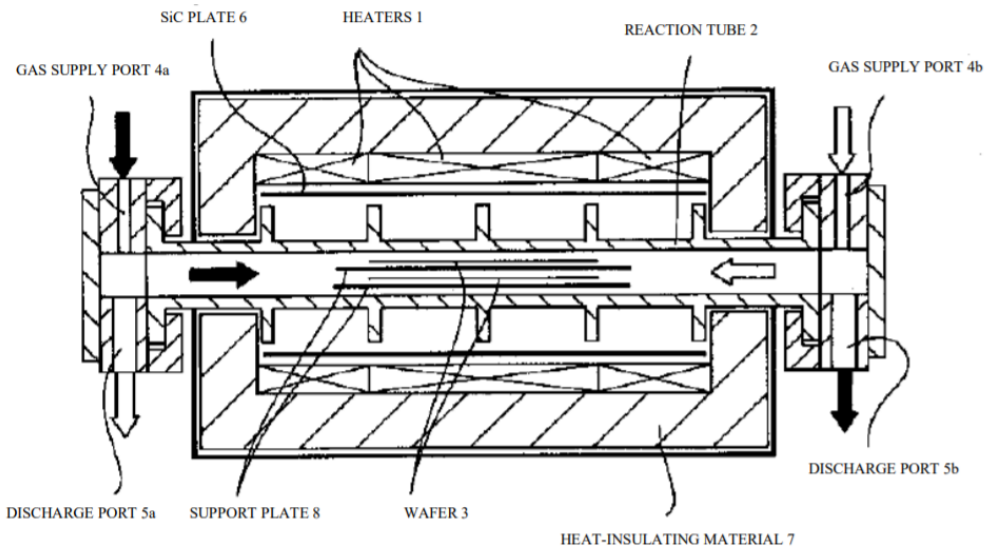

Watanabe's Figure 2, above, "is a cross-sectional view of the heating furnace" of a CVD device. *Id.* ¶ 22. During operation of the CVD device, "a wafer 3 is inserted into the reaction tube 2 in a horizontal state and mounted on the support plate 8." *Id.* ¶ 23. The wafer "is heated by the heater 1, and a gas is simultaneously supplied from one of the gas supply ports 4a and b while being discharged from one of the discharge ports 5a and b similarly formed at both ends of the reaction tube 2 . . . resulting in the production of a film or epitaxial growth on the surface of the wafer 3." *Id.* The CVD device may have multiple support plates so that "one or two wafers 3 are processed simultaneously" where "[t]he gas flows roughly parallel to the surface of the wafer 3." *Id.*

iv. Sivaramakrishnan (Ex. 1011)

Sivaramakrishnan, titled "Method and Apparatus for Processing a Semiconductor Substrate," discusses "high temperature (at least about 500-800°C) processing of semiconductor wafers" that "allow[s] multiple process

steps to be performed in situ in the same chamber to reduce total processing time and to ensure high quality processing for high aspect ratio devices." Ex. 1011, at [54], [57]. Sivaramakrishnan's Figure 1A, reproduced below, discloses a CVD apparatus:

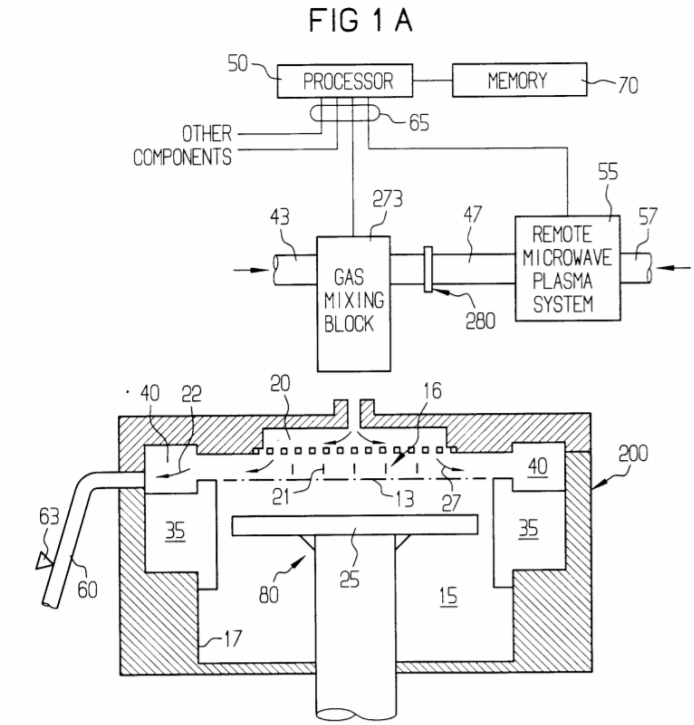

Sivaramakrishnan's Figure 1A, above, is "a vertical, cross-sectional view of one embodiment of a CVD apparatus." *Id.* at 8:22–23. Figure 1A shows "an enclosure assembly 200 housing a vacuum chamber 15 with a gas reaction area 16," where "[a] gas distribution plate 20 is provided above the gas reaction area 16 for dispersing reactive gases through perforated holes in plate 20 to a wafer (not shown) that rests on a vertically movable heater 25 (also referred to as a wafer support pedestal or susceptor)." *Id.* at 8:33–36. "Reactive and carrier gases are supplied through supply line 43 into a gas mixing box (or gas mixing block) 273 (Fig. 5), where they are preferably mixed together and delivered to plate 20." *Id.* at 8:48–49. "During

deposition processing, gas supplied to plate 20 is vented toward the wafer surface (as indicated by arrows 21), where it may be uniformly distributed radially across the wafer surface, typically in a laminar flow." *Id.* at 8:53–55. A "[r]emote microwave plasma system 55 integrally provided in CVD apparatus 10" can "perform cleaning or etching of native oxides or residues from the surface of the wafer, depending on the desired application." *Id.* at 9:15–18. The "remote microwave plasma system 55 receives gases via input line 57, which are energized by microwave radiation to create a plasma with etching radicals which are then sent via conduit 47 for dispersion through plate 20 to chamber 15." *Id.* at 9:21–23.

v. Kimura (Ex. 1007)

Kimura, titled, "EXAFS Studies of the Difference in Local Structure of Various Tantalum Oxide Capacitor Films," discusses "the relationship between the leakage current characteristics and the local structures around Ta" in tantalum oxide capacitors. Ex. 1007, Abstract. Kimura concludes that "differences in the leakage current characteristics of tantalum oxide capacitors that are treated by various processes are not due to difference in crystalline structure, but, to the degree of deficiency of oxygen atoms adjacent to the tantalum atoms." *Id.* at 5.

C. Asserted Anticipation Based on Shimada (Ground 1)

Petitioner asserts that claims 1, 3, 6, 10, 11, and 15 of the '063 patent are unpatentable as anticipated by Shimada under 35 U.S.C. § 102(b). Pet. 17–30. For example, in asserting that claim 1 is unpatentable as anticipated by Shimada, Petitioner specifically points to Shimada's disclosure and Figure 1 (*id.* at 17–23), noting in particular that "Shimada

discloses that the '*radicals* of the process gas produced by the plasma are introduced into the processing space S.'" *Id.* at 20 (emphasis added). *See also id.* at 23 ("The arrows in Figure 1 of Shimada show the *radicals* of the process gas flowing parallel to the surfaces of the wafers W." (emphasis added)).

Patent Owner argues that Shimada does not disclose the limitation recited in challenged independent claims 1 and 10 requiring "providing active species generated by the plasma source to the reaction chamber" because the term "active species means 'an excited gas that includes at least **radicals** and **ions,**'" and because Shimada only discloses that the radicals of the process gas are introduced into the wafer processing space S. Prelim. Resp. 7–10. Specifically, Patent Owner argues that "while Shimada teaches the generation of a plasma process gas, rather than allow the generated plasma's **active species** into the reaction space, Shimada's 'partition wall 22' physically **blocks ions** from entering the reaction chamber." *Id.* at 9.

Based on this preliminary record, we are not persuaded Petitioner has demonstrated a reasonable likelihood of prevailing on its contention that Shimada anticipates claims 1, 3, 6, 10, 11, and 15. Each of independent claims 1 and 10 requires the "active species generated by the plasma source" enter the reaction chamber where those "active species flow substantially parallel to the surfaces of the substrates." Here, we note Petitioner's seeming admission on this preliminary record, supported by its Declarant Dr. Glew (Ex. 1003 ¶ 43), that ions are among those "active species" that are in a plasma. *See* Pet. 13 ("It was understood that *the active species in a plasma included ions* and radicals" and "*ions in a plasma* recombine or are

neutralized as they move away from the plasma source."); *See also* Reply 2 ("The parties agree that 'active species' formed when a plasma is generated in a plasma source may include both ions and radicals."). Thus, Petitioner appears to take the position that ions are indeed one of "the active species" that are "generated by the plasma source" as recited in independent claims 1 and 10.[8]

Shimada teaches that a plasma used in deposition, etching, or ashing processes "contains a mixture of plasma gas ions, radicals, and electrons." Shimada ¶ 2. Shimada indicates that "*radicals* produced in the plasma generation space P are introduced into the processing space S with high efficiency." *Id.* ¶ 27 (emphasis added). "Due to the presence of the partition wall 22, *ions do not penetrate directly into the processing space S* and affect the semiconductor wafers W. Therefore, defects in the semiconductor wafers due to the effect of ions . . . do not occur." *Id.* (emphasis added). Thus, Shimada expressly states that ions—which Petitioner seemingly admits are among the "active species generated by the plasma source" in the challenged patent—do not penetrate directly[9] into the processing space S containing wafers W. *Id.* Independent claims 1 and 10, however, require "the active species [generated by the plasma source] flow substantially

---

[8] We observe that these statements may ultimately conflict with the Specification's teaching that "the type of generated active species depends on the electron temperature of the plasma." Ex. 1001, 6:67–7:1. Because "the electron temperature can be controlled," it is unresolved on this preliminary record whether it is possible to eliminate ions from those "active species generated by the plasma source" as recited in independent claims 1 and 10. The parties may wish to address this issue in future briefing.

[9] Petitioner does not contend that Shimada's ions somehow penetrate *in*directly into the processing space S. Rather, Petitioner focuses on the presence of radicals in Shimada's processing space S. Pet. 18, 20–21, 23.

parallel to the surfaces of the substrates" disposed in the reaction chamber. Because Shimada's partition wall 22 blocks ions from "penetrat[ing] directly into the processing space S," the "active species generated by the plasma source," which includes ions, fail to reach the processing space S containing the wafers. Shimada ¶ 27.

We furthermore note our disagreement with Petitioner's position that the term "active species," in the context of the independent claims (i.e., "the active species [generated by the plasma source that] flow substantially parallel to the surfaces of the substrates") excludes ions[10] because "the plasma source is separated from the reaction chamber by a certain distance." Reply 2–4. Petitioner's position is not persuasive because there is no limitation in independent claims 1 or 10 that requires a certain distance between the plasma source and the reaction chamber. These independent claims merely require that the "plasma source [be] arranged outside of and in proximity to the reaction chamber." It is dependent claims 3 and 11 that further limit independent claims 1 and 10, respectively, spacing the substrates disposed within the reaction chamber "apart from the plasma source at a distance where the concentration of the active species on surfaces of the substrates becomes substantially constant." Ex. 1001, 13:39–42, 14:23–26. Petitioner, relying on Figure 7 of the '063 patent, as well as its Declarant, asserts this "distance" limitation encompasses those distances

[10] We observe that this position conflicts with both the language of the claim and Petitioner's earlier statements. Pet. 13; Reply 2. Namely, claim 1 requires "*the* active species"—i.e., those "generated by the plasma source," which Petitioner seemingly admits contains ions—"flow substantially parallel to the surfaces of the substrates." Claim 1 recites that the reaction chamber contains the substrates.

away "from the plasma source at which the concentration of ions decreases to zero." Pet. 9–14. "[T]he presence of a dependent claim that adds a particular limitation gives rise to a presumption that the limitation in question is not present in the independent claim." *Phillips*, 415 F.3d at 1315. Indeed, a claim construction that results in a dependent claim having the same scope as the independent claim from which it depends, and which renders the dependent claim superfluous, is "presumptively unreasonable." *Beachcombers, Int'l Inc. v. Wildewood Creative Prods., Inc.*, 31 F.3d 1154, 1162 (Fed. Cir. 1994); *see also Uniroyal, Inc. v. Rudkin-Wiley Corp.*, 837 F.2d 1044, 1054–55 (Fed. Cir. 1988) (internal citations omitted) ("It is established in patent law that '[w]here some claims are broad and others narrow, the narrow claim limitations cannot be read into the broad whether to avoid invalidity or to escape infringement.'").

We furthermore note that Petitioner has not sufficiently established on this preliminary record that claims 3 and 11 require no ions to be present in the reaction chamber. Namely, claims 3 and 11, dependent from claims 1 and 10, respectively, recite "the substrates are spaced apart from the plasma source at a distance where the concentration of *the active species* on surfaces of the substrates becomes substantially constant." Thus, claims 3 and 11 each require the presence of "the active species generated by the plasma source" by referring to "*the* active species" of claims 1 and 10, respectively. Again, Petitioner appears to admit that such "active species generated by the plasma source" includes ions. Pet. 13; Reply 2; Ex. 1003 ¶ 43.

We note Petitioner's proffered construction that the "distance" limitation recited in claims 3 and 11 "encompass[es] distances downstream of the distance from the plasma source at which the concentration of ions

decreases to zero." Pet. 14. On this record, however, we are not persuaded by this argument. Figure 7 of the '063 patent, upon which Petitioner relies for support, has no scaling to indicate that the "distribution of active species having short lifetime" (which Petitioner asserts refers to ions (*See e.g.*, Pet. 12; Ex. 1003 ¶¶ 41–42)) actually "decreases to zero." *See* Ex. 1001, Fig. 7, 7:13–29. *See also* Ex. 1003 ¶ 39 ("Figure 7 does not include a scale."). Furthermore, Patent Owner appears to be correct that "Petitioner's own reference's equations confirm that . . . ions 'reach . . . less than 1%,' but do not reduce to zero. Ex. 1018, 234, 241, Eq. 7.23 (240)." Sur-Reply 3.

Therefore, based on this preliminary record, we are not persuaded that Petitioner has established a reasonable likelihood of prevailing on its contention that Shimada anticipates claims 1, 3, 6, 10, 11, and 15.

D. Asserted Obviousness Based on Shimada alone or in view of Noble (Grounds 2 and 3)

Petitioner asserts that claim 5 of the '063 patent is unpatentable as obvious under 35 U.S.C. § 103(a) over Shimada. Pet. 30–35. Petitioner also asserts that claims 3, 7, 11, and 12 are unpatentable as obvious over Shimada and Noble. *Id.* at 35–42.

Patent Owner does not specifically address these asserted grounds other than to state they should be rejected for the same reasons as asserted ground 1. Prelim. Resp. 22.

With respect to claim 5, we agree with Patent Owner that the asserted obviousness ground suffers from the same deficiency as does asserted ground 1—namely, that Shimada's ions, which Petitioner appears to admit are necessarily "generated by the plasma source," are blocked from entering the processing space S. Pet. 13; Reply 2; Ex. 1003 ¶ 43; Shimada ¶ 27.

With respect to claims 3, 7, 11, and 12, Petitioner has not sufficiently established on this preliminary record that these claims require no ions to be present in the reaction chamber. Regarding claims 3 and 11, our discussion *supra* of Shimada's purported anticipation of these claims applies equally here. Specifically, claims 3 and 11 recite "the active species" and refer back to their respective independent claims 1 and 10 which recite "active species generated by the plasma source." Petitioner appears to admit that "active species generated by the plasma source" includes ions. Pet. 13; Reply 2. Shimada's partition wall 22, however, blocks ions from "penetrat[ing] directly into the processing space S," thus all of the "active species generated by the plasma source"—which includes ions as apparently admitted by Petitioner (Pet. 13; Reply 2)—fail to reach the processing space S containing the wafers. Shimada ¶ 27. Petitioner's reliance on Noble does not account for the apparent lack of ions in Shimada's reaction chamber. Pet. 35–39. To the contrary, Petitioner instead highlights how Noble seeks to eliminate ions. *See id.* at 39 (explaining how Noble teaches spacing the substrates "apart from the plasma source downstream of the distance from the plasma source at which the concentration of ions decreases to zero (and hence at a distance where the concentration of the active species on the surfaces of the substrates becomes substantially constant)").

Petitioner's assertion that claims 7 and 12 (which depend from claims 1 and 11, respectively) are obvious fares no better than its assertion against claims 3 and 11, because claims 7 and 12 merely require adjustment of "a distance" between the substrates and the plasma source by moving the plasma source.

We are thus unpersuaded that Petitioner has established a reasonable likelihood of prevailing on its contention that Shimada renders obvious claim 5, or that the combined disclosures of Shimada and Noble render obvious claims 3, 7, 11, and 12.

E. Asserted Obviousness Based on Watanabe and Sivaramakrishnan (Ground 5)

Petitioner asserts that claims 1, 2, 4, 8–10, 13, 14, and 16 of the ’063 patent are unpatentable as obvious under 35 U.S.C. § 103(a) over Watanabe and Sivaramakrishnan. Pet. 42–70. Petitioner alleges that Watanabe discloses some of the limitations recited in claim 1, and describes an *in-situ* plasma reactor, but “does not expressly disclose a plasma source arranged **outside of** and in proximity to the reaction chamber (that is, in a remote-plasma configuration).” Pet. 42–44. For support, Petitioner provides the following colorized version of Watanabe’s Figure 7:

(FIG. 7)

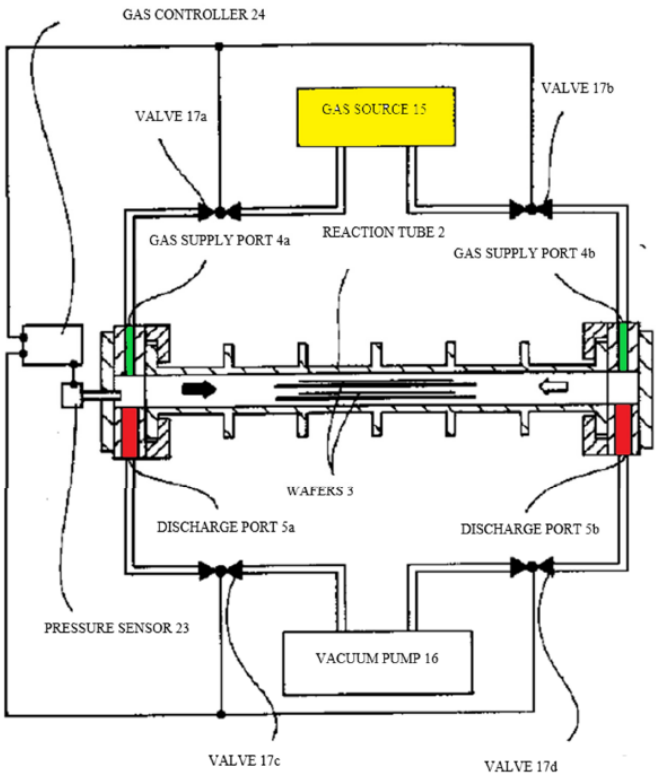

Id. at 50.

Petitioner's colorized Figure 7 depicts gas source 15 in yellow, gas supply ports 4a and 4b in green, and discharge ports 5a and 5b in red. *Id.* According to Petitioner, "Figure 7 shows that gas source 15 provides the reactive gases for [chemical vapor deposition, or] CVD to the reaction tube 2 via gas supply ports 4a and 4b." *Id.*

Petitioner asserts, however, that Sivaramakrishnan discloses a "remote" plasma source (*id.* at 44–45) and provides the following colorized Figure 1A of Sivaramakrishnan:

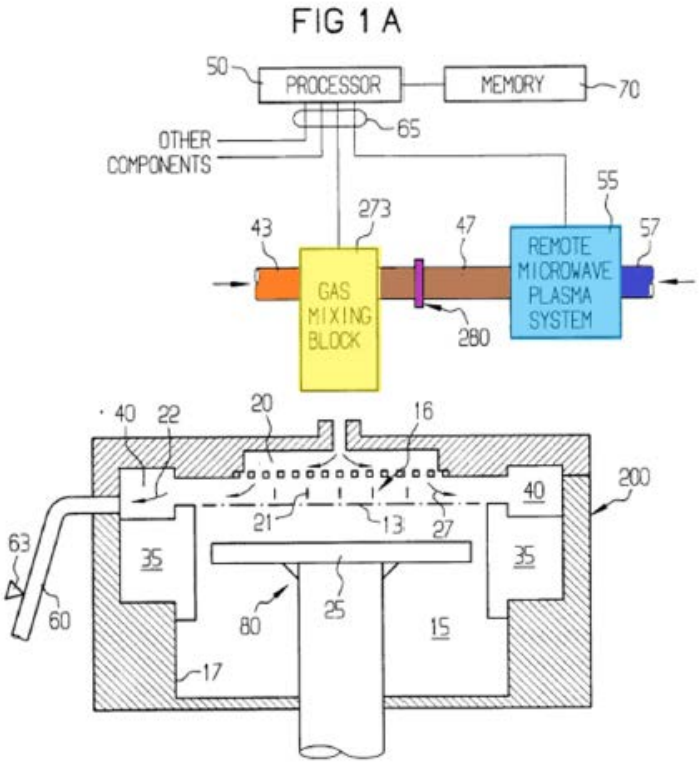

Id. at 46.

Colorized Figure 1A of Sivaramakrishnan depicts remote microwave plasma system 55 in blue and gas mixing block 273 in yellow.

Petitioner argues that the ordinarily skilled artisan would have been motivated to combine Sivaramakrishnan with Watanabe to arrive at a "combined reactor" as set forth in the following illustration provided by Petitioner:

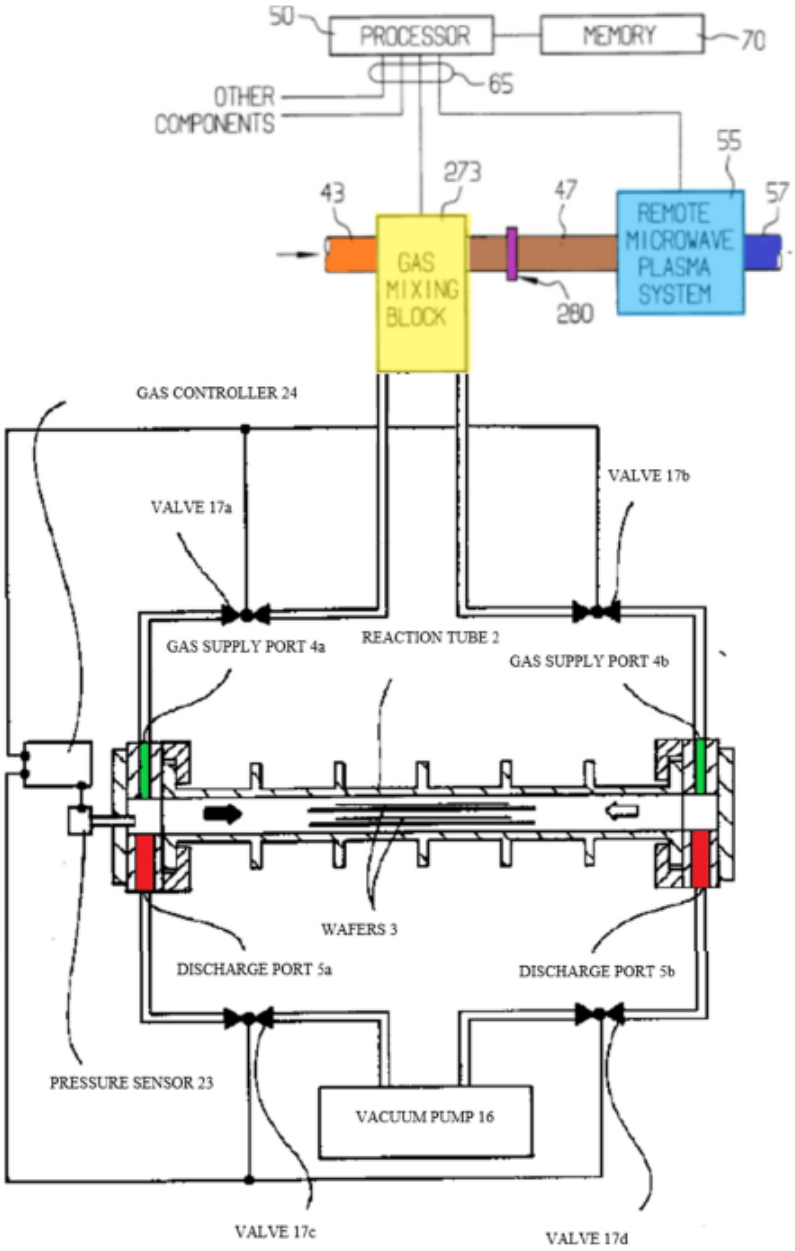

COMBINED REACTOR

Id. at 48–49, 52.

Petitioner's "combined reactor" depicts substituting Watanabe's gas source 15 with Sivaramakrishnan's gas mixing block 273 and remote microwave plasma system 55. *Id.* Petitioner asserts that the skilled artisan would have been motivated to modify Watanabe in this fashion "to allow

Watanabe's batch reactor to implement both CVD and remote-plasma treatment in the same chamber" because the skilled artisan would have "recognized that [the combined] reactor would have beneficially reduced capital equipment costs by eliminating the need for separate reactors or handling robots; promoted film quality by avoiding exposing the wafers to atmosphere between processes; and improved life cycle times by eliminating queueing between deposition and plasma treatment processes." *Id.* at 48–49.

Petitioner avers "a skilled artisan would have predictably substituted the yellow gas mixing box 273 and upstream components of Sivaramakrishnan for the yellow gas source 15 of Watanabe to create a reactor capable of CVD and remote-plasma treatment in the same reaction tube" because "Sivaramakrishnan indicates that batch processing capability would have been expected to behave predictably in a unitary reactor." *Id.* at 50–51. Petitioner then avers that the "combined reactor" of Watanabe and Sivaramakrishnan satisfies the remaining limitations of independent claim 1. *Id.* at 54–56.

Patent Owner argues that "neither Watanabe nor Siva disclose[s] supplying **active species** that include both **radicals** and **<u>ions</u>** [] entering the reaction chamber through a supply port." Prelim. Resp. 10. Specifically, Patent Owner avers that Watanabe fails to meet this limitation because its plasma source is *in situ*. *Id.* at 10–11. Patent Owner then focuses on Sivaramakrishnan's disclosure regarding the injection of radicals into the reaction chamber, and avers that "Petitioner has failed to identify any disclosure in [Sivaramakrishnan] that teaches supplying active species (including ions) into the reaction chamber." *Id.* at 11–13.

At this point in the proceeding, we are not persuaded by Patent Owner's position that ions would not be present in the reaction chamber of the combined reactor of Watanabe and Sivaramakrishnan. Prelim. Resp. 10–13. On the record developed thus far, both Patent Owner and Petitioner have agreed that ions are among those active species that are generated by a plasma.[11] *See* Pet. 13 ("It was understood that the active species in a plasma included ions and radicals"); Reply 2 ("The parties agree that the 'active species' formed when a plasma is generated <u>in a plasma source</u> may include both ions and radicals"); Prelim. Resp. 5 ("[I]t is clear from the intrinsic record that supplying 'active species' included in the plasma into the reaction chamber means supplying 'an excited gas that includes at least ions and radicals' into the reaction chamber."); Sur-Reply 3 ("[T]he specification is clear that the active species includes both ions and radicals.").

Based on this preliminary record, we are not persuaded that Sivaramakrishnan's repeated reference to "radicals" in the processing chamber necessarily means that the chamber is devoid of ions. Here, we note Sivaramakrishnan's disclosure that "ion implantation causes damage to the semiconductor surface" because "ions bombarded at relatively high energy levels *have a tendency to* tunnel or channel through the semiconductor material and *cause damage such as point defects*." Ex. 1011, 2:49–52 (emphasis added). Such point defects, if created, "*may* lead to

---

[11] We again observe that these statements may ultimately conflict with the Specification's teaching that "the type of generated active species depends on the electron temperature of the plasma." Ex. 1001, 6:67–7:1. Because "the electron temperature can be controlled," it is unresolved on this preliminary record whether it is possible to eliminate ions from those "active species generated by the plasma source" as recited in independent claims 1, 10, and 16.

irregular and nonuniform junction depths." *Id.* at 2:52–53. Sivaramakrishnan explains that it was "well known [that] conventional substrate processing systems using in situ plasma during processing experience physical *sputtering of ions which attack chamber surfaces, such as aluminum walls, resulting in metal contamination of the substrate,*" making "[u]se of in situ plasma . . . undesirable." *Id.* at 2:30–33 (emphasis added). Sivaramakrishnan therefore teaches that a "substrate processing system, which does not use in situ plasma, is needed." *Id.* at 2:33–34. Sivaramakrishnan then discusses a preferred embodiment where a remote plasma system is provided instead of an *in situ* plasma process in order "to *lower* metal contamination," and to "ensure effective and uniform dopant diffusion from the doped dielectric layer without causing *significant* surface damage to the silicon wafer." *Id.* at 5:35–49 (emphasis added). Thus, Sivaramakrishnan discusses how, in some instances, the negative effects of ions could be potentially minimized (i.e., not eliminated) by placing the plasma system remote from the reaction chamber. Other than recite the numerous instances that Sivaramakrishnan refers to "radicals" (Prelim. Resp. 11–13), Patent Owner points to no evidence within Sivaramakrishnan that sufficiently establishes that ions are somehow eliminated from Sivaramakrishnan's reaction chamber.

Patent Owner also argues that a person having ordinary skill in the art would not have combined Watanabe and Sivaramakrishnan. *Id.* at 14–21. Specifically, Patent Owner argues that Watanabe already supports both CVD and plasma treatments and, therefore, one would not have been motivated to combine Sivaramakrishnan with Watanabe to add a second plasma source. *Id.* at 14–16. Patent Owner further argues that Petitioner's Declarant, in a

separate proceeding (IPR2019-00364), disparaged the proffered configuration in the instant proceeding. *Id.* at 19–21.

We do not agree with Patent Owner. Petitioner asserts that the skilled artisan "would have been motivated to implement Sivaramakrishnan's remote microwave plasma system 55 with Watanabe's CVD reactor for improved wafer quality, while retaining the benefits of equipment cost savings, improved wafer quality, and reduced cycle times." Pet. 49. Upon review of the record, we find Petitioner's proffered rationale to combine the teachings of Watanabe and Sivaramakrishnan sufficient to establish a reasonable likelihood that at least one of the challenged claims 1, 2, 4, 8–10, 13, 14, and 16 is unpatentable. We are also not persuaded at this point in the proceeding by Patent Owner's allegation that Petitioner's Declarant disparaged the proffered arrangement here to such a degree to amount to no more than impermissible hindsight.

Therefore, based on this preliminary record, we are persuaded Petitioner has demonstrated a reasonable likelihood of prevailing on its contentions that Watanabe and Sivaramakrishnan render claims 1, 2, 4, 8–10, 13, 14, and 16 obvious. Petitioner presents arguments that the limitations of independent claims 1, 10, and 16, and dependent claims 2, 4, 8, 9, 13, and 14, are present in Watanabe and Sivaramakrishnan, and presents evidence supporting the same. Pet. 42–70. Further, Petitioner sets forth a suitable rationale for modifying the disclosure of Watanabe with that of Sivaramakrishnan. *Id.* at 48–49. Petitioner relies on the testimony of Dr. Glew to support its contentions, and at this stage in the proceeding, we credit his testimony in support of Petitioner's arguments. Ex. 1003 ¶¶ 143, 144, 147–151, 158, 166, 167, 169–171, 173–175, 177, 179, 182, 185, 188, 189,

192, 193, 195–197, 206, 209, 210, 215, 217, 218, 226–228, 231, 233, 234, 241. For these reasons, based on the record currently before us, we are satisfied Petitioner has demonstrated a reasonable likelihood that it would prevail in showing that claims 1, 2, 4, 8–10, 13, 14, and 16 are unpatentable as being obvious over Watanabe and Sivaramakrishnan.

F. Asserted Obviousness Based on Watanabe, Sivaramakrishnan, and Kimura (Ground 5)

Petitioner asserts that claims 9 and 14 of the ’063 patent are unpatentable as obvious under 35 U.S.C. § 103(a) over Watanabe, Sivaramakrishnan, and Kimura. Pet. 70–74.

Patent Owner argues that Kimura does not remedy the deficiencies of Watanabe and Sivaramakrishnan identified with respect to Ground 4, and therefore Ground 5 should be denied for the same reasons as Ground 4. Prelim. Resp. 22.

Based on this preliminary record, we are persuaded Petitioner has demonstrated a reasonable likelihood of prevailing on its contentions that Watanabe, Sivaramakrishnan, and Kimura render claims 9 and 14 obvious. Petitioner presents arguments that the limitations of dependent claims 9 and 14 are present in Watanabe, Sivaramakrishnan, and Kimura, and presents evidence supporting the same. Pet. 70–72. Further, Petitioner sets forth a motivation for combining the teachings of Watanabe, Sivaramakrishnan, and Kimura. *Id.* at 72–74.

Petitioner relies on the testimony of Dr. Glew to support its contentions, and at this stage in the proceeding, we credit his testimony in support of Petitioner’s arguments. Ex. 1003 ¶¶ 245–249. For these reasons, based on the record currently before us, we are satisfied Petitioner has

demonstrated a reasonable likelihood that it would prevail in showing that claims 9 and 14 are unpatentable as being obvious over Watanabe, Sivaramakrishnan, and Kimura.

III. CONCLUSION

For the foregoing reasons, we are persuaded that the Petition establishes a reasonable likelihood that Petitioner would prevail in its challenge to at least one claim of the ’063 patent. As discussed above, we question the sufficiency of Petitioner’s contentions with respect to certain grounds, but nevertheless institute an *inter partes* review of claims 1–16 of the ’063 patent on all asserted grounds.

Although we exercise our discretion and institute review, we remind the parties that we have not yet made a final determination as to the patentability of any of the challenged claims.

IV. ORDER

In consideration of the foregoing, it is hereby:

ORDERED that, pursuant to 35 U.S.C. § 314(a), an *inter partes* review is hereby instituted as to all challenged claims 1–16 of the ’063 patent with respect to all the grounds set forth in the Petition; and

FURTHER ORDERED that pursuant to 35 U.S.C. § 314(c) and 37 C.F.R. § 42.4, notice is hereby given of the institution of a trial commencing on the entry date of this decision.

PETITIONER:

Kerry Taylor
2kst@knobbe.com

Adeel Akhtar
2asa@knobbe.com

Nathanael Luman
2nrl@knobbe.com

Bridget Smith
2bzs@knobbe.com

PATENT OWNER:

Dion Bregman
dion.bregman@morganlewis.com

Michael Lyons
michael.lyons@morganlewis.com

Jason Gettleman
jason.gettleman@morganlewis.com