Trials@uspto.gov
571-272-7822

Paper 12
Entered: August 2, 2019

UNITED STATES PATENT AND TRADEMARK OFFICE

BEFORE THE PATENT TRIAL AND APPEAL BOARD

APPLE, INC.,
Petitioner,

v.

UUSI, LLC d/b/a NARTRON,
Patent Owner.

Case IPR2019-00360
Patent 5,796,183

Before BRYAN F. MOORE, MINN CHUNG, and
NORMAN H. BEAMER, *Administrative Patent Judges*.

CHUNG, *Administrative Patent Judge*.

DECISION
Denying Institution of *Inter Partes* Review
35 U.S.C. § 314

I. INTRODUCTION

On November 29, 2018, Apple Inc. ("Petitioner" or "Apple") filed a Petition (Paper 2, "Pet.") requesting an *inter partes* review of claims 40–43, 45, 47, 48, and 61–69 (the "challenged claims") of U.S. Patent No. 5,796,183 (Ex. 1001, "the '183 patent"). UUSI, LLC d/b/a Nartron ("Patent Owner") filed a Preliminary Response (Paper 8, "Prelim. Resp.") on May 6, 2019. Pursuant to a May 22, 2019 Order (Paper 9), the parties exchanged briefs further addressing the issue of discretionary denial of institution under 35 U.S.C. § 314(a) (Papers 10, 11).

By statute, institution of an *inter partes* review may not be authorized unless "the information presented in the petition . . . and any response . . . shows that there is a reasonable likelihood that the petitioner would prevail with respect to at least 1 of the claims challenged in the petition." 35 U.S.C. § 314(a). Upon consideration of the Petition and the Preliminary Response, we conclude that the information presented does not show there is a reasonable likelihood that Petitioner would prevail in establishing the unpatentability of any challenged claim of the '183 patent. Accordingly, we do not institute an *inter partes* review.

II. BACKGROUND

A. Related Matters

According to Petitioner, the '183 patent is the subject of the following district court litigation: *UUSI, LLC v. Apple Inc.*, No. 3-18-cv-04637 (N.D. Cal.); and *UUSI, LLC v. Apple Inc.*, No. 2:17-cv-13798 (E.D. Mich.), which has been transferred to the Northern District of California. Pet. 66. Patent Owner indicates that the '183 patent is also the subject of *UUSI, LLC v.*

Samsung Electronics Co., Ltd., No. 1:15-cv-00146 (W.D. Mich.). Paper 3, 2.

The ’183 patent has been subject to two reexaminations: Ex Parte Reexamination Control No. 90/012,439, certificate (“Reexam. Cert. C1”) issued April 29, 2013 (Ex. 1006, 1); and Ex Parte Reexamination Control No. 90/013,106, certificate (“Reexam. Cert. C2”) issued June 27, 2014 (Ex. 1007, 24). The challenged claims were amended or added during the reexaminations. Ex. 1006, 2–3; Ex. 1007, 27–28.

The ’183 patent is the subject of an earlier-filed *inter partes* review proceeding, *Samsung Electronics Co., Ltd. v. UUSI, LLC*, Case IPR2016-00908 (“the Samsung IPR”). Pet. 66; Paper 3, 1. The Federal Circuit recently vacated the Final Written Decision in the Samsung IPR, in which the Board determined that Samsung had not demonstrated unpatentability of any claims, and remanded to the Board for further proceedings. *Samsung Elecs. Co. v. UUSI, LLC*, No. 2018-1310, 2019 WL 2511739, at *5 (Fed. Cir. June 18, 2019) (“Samsung Appeal Opinion”).

Petitioner has also filed five other petitions challenging claims of the ’183 patent under various grounds in IPR2019-00355, IPR2019-00356, IPR2019-00357, IPR2019-00358, and IPR2019-00359. Paper 3, 1. We denied institution of review in IPR2019-00355, IPR2019-00356, and IPR2019-00357. IPR2019-00355, Paper 14; IPR2019-00356, Paper 14; IPR2019-00357, Paper 12.

B. The '183 Patent

The '183 patent, titled "Capacitive Responsive Electronic Switching Circuit," was filed January 31, 1996, and issued August 18, 1998. Ex. 1001, [22], [45], [54]. The '183 patent has expired. Prelim. Resp. 18.

The '183 patent relates to a "capacitive responsive electronic switching circuit used to make possible a 'zero force' manual electronic switch." Ex. 1001, 1:6–9. According to the '183 patent, zero force touch switches have no moving parts and no contact surfaces that directly switch loads. *Id*. at 2:40–41. Instead, such switches detect an operator's touch and use solid state electronics to switch loads or activate mechanical relays. *Id*. at 2:42–44. "A common solution used to achieve a zero force touch switch has been to make use of the capacitance of the human operator." *Id*. at 3:12–14. As background, the '183 patent describes three methods used by capacitive touch switches to detect an operator's touch, one of which relies on the change in capacitive coupling between a touch terminal and ground. *Id*. at 3:13–15, 3:44–46. In this method, "[t]he touch of an operator then provides a capacitive short to ground via the operator's own body capacitance." *Id*. at 3:52–55. Figure 8, reproduced below, is an example that makes use of this method.

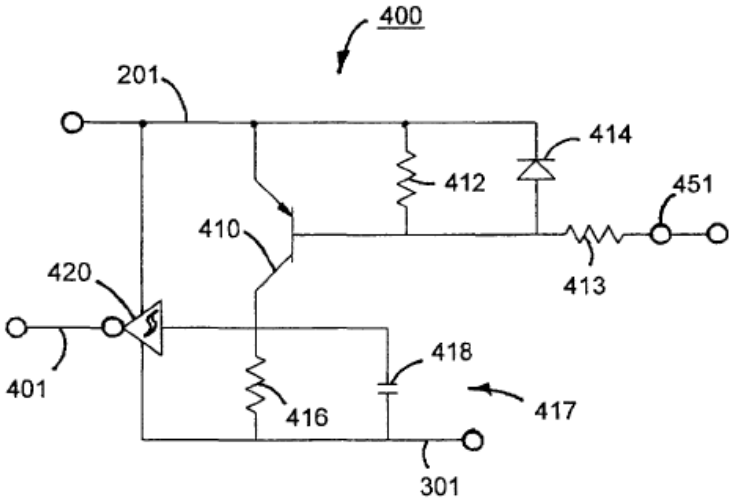

Fig. 8

Figure 8 depicts a "touch circuit" in which, when a pad (not shown) is touched to create a short to ground via terminal 451, transistor 410 turns on and connects a high frequency input at 201 to resistor/capacitor circuit 416/418, thus triggering Schmitt Trigger 420 to provide control output 401. *Id.* at 14:47–52, 15:17–47. Significantly, the operator of a capacitive touch switch using this method need not come in conductive contact with the touch terminal. *Id.* at 3:57–59. Rather, the operator needs only to come into close proximity of the switch. *Id.*

Figure 4 of the ’183 patent is reproduced below.

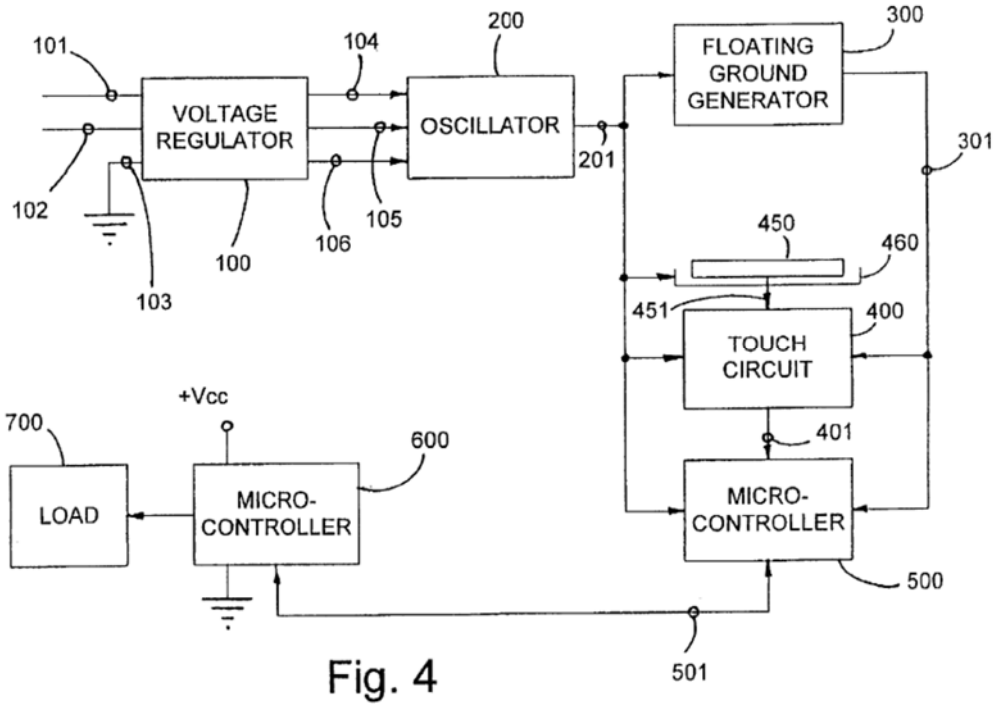

Fig. 4

Figure 4 is a block diagram of a capacitive responsive electronic switching circuit according to a first embodiment of the ’183 patent. *Id.* at 7:23–25. As depicted in Figure 4, the electronic switching circuit of the first embodiment comprises voltage regulator 100, oscillator 200, floating ground generator 300, touch circuit 400, touch pad 450, and microcontroller 500. *Id.* at 11:64–12:33.

Voltage regulator 100 converts a received AC voltage to a DC voltage and supplies a regulated 5 volts (V) DC power to oscillator 200 via lines 104 and 105. *Id.* at 11:67–12:2. Voltage regulator 100 also supplies oscillator 200 with 26 V DC power via line 106. *Id.* at 12:2–3.

Upon being powered by voltage regulator 100, oscillator 200 generates a square wave with a frequency of 50 kHz, or preferably greater than 800 kHz, and having an amplitude of 26 V peak. *Id.* at 12:6–9.

Floating common generator 300 receives the 26 V peak square wave from oscillator 200, and outputs a regulated floating common that is 5 volts below the square wave output from oscillator 200 and has the same phase and frequency as the received square wave. *Id.* at 12:14–18. This floating common output is supplied to touch circuit 400 and microcontroller 500 via line 301 such that the output square wave from oscillator 200 and floating common output from floating common generator 300 provide power to touch circuit 400 and microcontroller 500. *Id.* at 12:18–23.

Touch circuit 400 senses capacitance from touch pad 450 via line 451 and outputs a signal to microcontroller 500 via line 401 upon detecting a capacitance to ground at touch pad 450 that exceeds a threshold value. *Id.* at 12:24–27. Figure 8 reproduced above describes touch circuit 400 in detail. *Id.* at 12:27–28.

Upon receiving an indication from touch circuit 400 that a sufficient capacitance to ground is present at touch pad 450, microcontroller 500 outputs a signal to load-controlling microcontroller 600 via line 501, which is preferably a two way optical coupling bus. *Id.* at 12:29–34. Microcontroller 600 then responds in a predetermined manner to control load 700. *Id.* at 12:33–35.

Figure 11 of the ’183 patent is reproduced below.

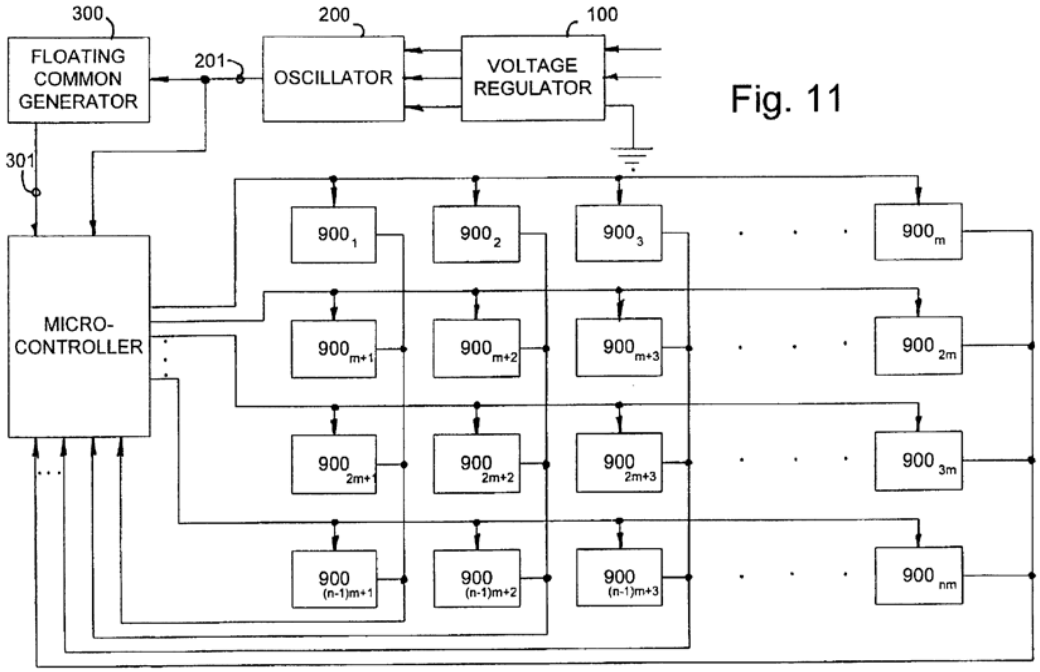

Figure 11 is a block diagram of a capacitive responsive electronic switching circuit according to a second embodiment of the ’183 patent. *Id.* at 7:43–45. As depicted in Figure 11, the second embodiment discloses a “multiple touch pad circuit,” which is a variation of the electronic switching circuit of the first embodiment discussed above in that the multiple touch pad circuit includes “an array of touch circuits” 900_1 through 900_{nm}, where each element of the array includes touch circuit 400 described in Figures 4 and 8 above, as well as touch pad 450 depicted in Figure 4. *Id.* at 18:34–43.

In this “multiple touch pad circuit” embodiment, microcontroller 500 selects each row of touch circuits 900_1 to 900_{nm} by providing the signal from oscillator 200 to selected rows of touch circuits. *Id.* at 18:43–46. The ’183 patent describes that “[i]n this manner, microcontroller 500 can sequentially

activate the touch circuit rows and associate the received inputs from the columns of the array with the activated touch circuit(s)." *Id*. at 18:46–49. In other words, the microcontroller selects successive rows of the touch circuit array by providing the signal from oscillator 200 sequentially to each row, such that a particular activated touch circuit is detected by the microcontroller via association of an activated row with received input from a column line of the array. *Id*. at 18:43–49.

The '183 patent recognizes that placing capacitive touch switches in dense arrays, as in Figure 11, can result in unintended actuations. *Id*. at 3:65–4:3. One method of addressing this problem known in the art involves placing guard rings around each touch pad. *Id*. at 4:4–7. Another known method of addressing this problem is to adjust the sensitivity of the touch pad such that the operator's finger must entirely overlap a touch terminal. *Id*. at 4:8–14. "Although these methods (guard rings and sensitivity adjustment) have gone a considerable way in allowing touch switches to be spaced in comparatively close proximity, a susceptibility to surface contamination remains as a problem." *Id*. at 4:14–18.

The '183 patent uses the technique of Figure 11 to overcome the problem of unintended actuation of small capacitive touch switches "by using the method of sensing body capacitance to ground in conjunction with redundant detection circuits." *Id*. at 5:33–35. Specifically, the '183 patent's touch detection circuit operates at frequencies at or above 50 kHz, and preferably at or above 800 kHz, in order to minimize the effects of surface contamination on the touch pads. *Id*. at 11:19–29. Operating at these frequencies also improves sensitivity, allowing close control of the

proximity required for actuation of small-sized touch terminals in a close array, such as a keyboard. *Id*. at 5:48–57.

C. Illustrative Claim

Of the challenged claims, claims 40 and 61 are independent. Claim 40 is illustrative of the challenged claims and is reproduced below.

> 40. A capacitive responsive electronic switching circuit comprising:
>
> an oscillator providing a periodic output signal having a predefined frequency;
>
> a microcontroller using the periodic output signal from the oscillator, the microcontroller selectively providing signal output frequencies to a plurality of small sized input touch terminals of a keypad, wherein the selectively providing comprises the microcontroller selectively providing a signal output frequency to each row of the plurality of small sized input touch terminals of the keypad;
>
> the plurality of small sized input touch terminals defining adjacent areas on a dielectric substrate for an operator to provide inputs by proximity and touch; and
>
> a detector circuit coupled to said oscillator for receiving said periodic output signal from said oscillator, and coupled to said input touch terminals, said detector circuit being responsive to signals from said oscillator via said microcontroller and a presence of an operator's body capacitance to ground coupled to said touch terminals when proximal or touched by the operator to provide a control output signal,
>
> wherein said predefined frequency of said oscillator and said signal output frequencies are selected to decrease a first impedance of said dielectric substrate relative to a second impedance of any contaminate that may create an electrical path on said dielectric substrate between said adjacent areas defined by the plurality of small sized input touch terminals,

> and wherein said detector circuit compares a sensed body capacitance change to ground proximate an input touch terminal to a threshold level to prevent inadvertent generation of the control output signal.

Ex. 1001, Reexam. Cert. C2, 1:23–56.

D. Asserted Prior Art and Grounds of Unpatentability

Petitioner cites the following references in its challenges to patentability.

Reference	Issue Date	Designation	Exhibit No.
U.S. Patent No. 4,561,002	Dec. 24, 1985	Chiu	Ex. 1005
U.S. Patent No. 4,922,061	May 1, 1990	Meadows[1]	Ex. 1013
U.S. Patent No. 4,418,333	Nov. 29, 1983	Schwarzbach	Ex. 1014
U.S. Patent No. 4,731,548	Mar. 15, 1988	Ingraham ’548	Ex. 1016

Petitioner also relies on the Declaration of Dr. Phillip D. Wright (Ex. 1003, “Wright Declaration” or “Wright Decl.”).

Petitioner asserts the following grounds of unpatentability (Pet. 3):

Claims Challenged	Statutory Basis	References
40, 45, 47, 48, 61–64, 66	§ 103(a)[2]	Chiu and Schwarzbach
41–43, 67–69	§ 103(a)	Chiu, Schwarzbach, and Meadows

[1] For clarity and ease of reference, we only list the first named inventor.

[2] The Leahy-Smith America Invents Act, Pub. L. No. 112-29, 125 Stat. 284 (2011) (“AIA”), amended 35 U.S.C. § 103. Because the ’183 patent has an effective filing date prior to the effective date of the applicable AIA amendments, we refer to the pre-AIA version of § 103.

Claims Challenged	Statutory Basis	References
65	§ 103(a)	Chiu, Schwarzbach, and Ingraham ’548

III. ANALYSIS

A. Level of Ordinary Skill in the Art

Petitioner’s declarant, Dr. Wright, opines that a person of ordinary skill in the art as of the critical date of the ’183 patent would have had at least a Bachelor of Science degree in electrical engineering or a related technical field, and two or more years of experience in electrical circuits and sensor systems. Ex. 1003 ¶ 22. Patent Owner does not propose a level of ordinary skill in the art in the Preliminary Response.

At this stage of the proceeding, we find Petitioner’s proposal consistent with the level of ordinary skill in the art reflected by the prior art of record, *see Okajima v. Bourdeau*, 261 F.3d 1350, 1355 (Fed. Cir. 2001); *In re GPAC Inc.*, 57 F.3d 1573, 1579 (Fed. Cir. 1995). Therefore, for purposes of this Decision, we adopt Petitioner’s unopposed position as to the level of ordinary skill in the art.

B. Claim Construction

Due to a recent rule change, the claim construction standard that applies in an *inter partes* review depends on whether the petition was filed before or after November 13, 2018. *See* Changes to the Claim Construction Standard for Interpreting Claims in Trial Proceedings Before the Patent Trial and Appeal Board, 83 Fed. Reg. 51,340, 51,340–41 (Oct. 11, 2018) (codified at 37 C.F.R. § 42.100(b) (2019)). Because the Petition was filed November

29, 2018 (Paper 5, 1), we apply the same claim construction standard that would be used to construe the claim in a civil action under 35 U.S.C. § 282(b), following the standard articulated in *Phillips v. AWH Corp.*, 415 F.3d 1303 (Fed. Cir. 2005) (*en banc*).[3] *See* 83 Fed. Reg. at 51,343.

Under that standard, claim terms are generally given their ordinary and customary meaning, which is "the meaning that the term would have to a person of ordinary skill in the art in question at the time of the invention." *Phillips*, 415 F.3d at 1312–13. "Importantly, the person of ordinary skill in the art is deemed to read the claim term not only in the context of the particular claim in which the disputed term appears, but in the context of the entire patent, including the specification." *Id.* at 1313. "In determining the meaning of the disputed claim limitation, we look principally to the intrinsic evidence of record, examining the claim language itself, the written description, and the prosecution history, if in evidence." *DePuy Spine, Inc. v. Medtronic Sofamor Danek, Inc.*, 469 F.3d 1005, 1014 (Fed. Cir. 2006) (citing *Phillips*, 415 F.3d at 1312–17).

Petitioner proposes constructions for three claim terms: "providing signal output frequencies" recited in independent claims 40 and 61; "supply voltage" recited in claim 61; and "coupled" recited in claims 40 and 61. Pet. 9–12. At this stage of the proceeding, Patent Owner disputes the construction for only one of those terms, namely, "providing signal output frequencies." Prelim. Resp. 24–28.

---

[3] We note that, because the '183 patent has expired, our claim interpretation would have followed *Phillips* regardless of filing date. *See In re Rambus Inc.*, 694 F.3d 42, 46 (Fed. Cir. 2012).

As discussed below, our Decision in this case does not rest on the distinctions between these proposed constructions. For purposes of this Decision, we determine that no claim term requires express construction. *See Vivid Techs., Inc. v. Am. Sci. & Eng'g, Inc.*, 200 F.3d 795, 803 (Fed. Cir. 1999) (holding that only terms that are in controversy need to be construed, and "only to the extent necessary to resolve the controversy"); *see also Nidec Motor Corp. v. Zhongshan Broad Ocean Motor Co.*, 868 F.3d 1013, 1017 (Fed. Cir. 2017) (applying *Vivid Techs.* in the context of an *inter partes* review).

C. Obviousness over Chiu and Schwarzbach

In this asserted ground of obviousness, Petitioner contends that claims 40, 45, 47, 48, 61–64, and 66 are unpatentable under 35 U.S.C. § 103(a) as obvious over the combination of Chiu and Schwarzbach. Pet. 14–56. In support of its contentions, Petitioner submits the Declaration of Dr. Wright (Ex. 1003). *Id.* Given the evidence of record, we are not persuaded that Petitioner has established a reasonable likelihood of prevailing on this asserted ground as to any of these challenged claims for the reasons explained below.

1. Relevant Principles of Law

A claim is unpatentable under 35 U.S.C. § 103(a) if the differences between the claimed subject matter and the prior art are such that the subject matter, as a whole, would have been obvious at the time the invention was made to a person having ordinary skill in the art to which the subject matter pertains. *KSR Int'l Co. v. Teleflex Inc.*, 550 U.S. 398, 406 (2007). The question of obviousness is resolved on the basis of underlying factual

determinations, including: (1) the scope and content of the prior art; (2) any differences between the claimed subject matter and the prior art; (3) the level of skill in the art; and (4) where in evidence, so-called secondary considerations. *Graham v. John Deere Co.*, 383 U.S. 1, 17–18 (1966). We analyze these asserted grounds based on obviousness with the principles identified above in mind.

2. Overview of Chiu (Ex. 1005)

Chiu describes a capacitive type touch switch cell arrangement using capacitive coupling between a touch pad and an electrode, which is alterable by a human touching or being proximate to the touch pad. Ex. 1005, [57].

Figure 6A of Chiu is reproduced below.

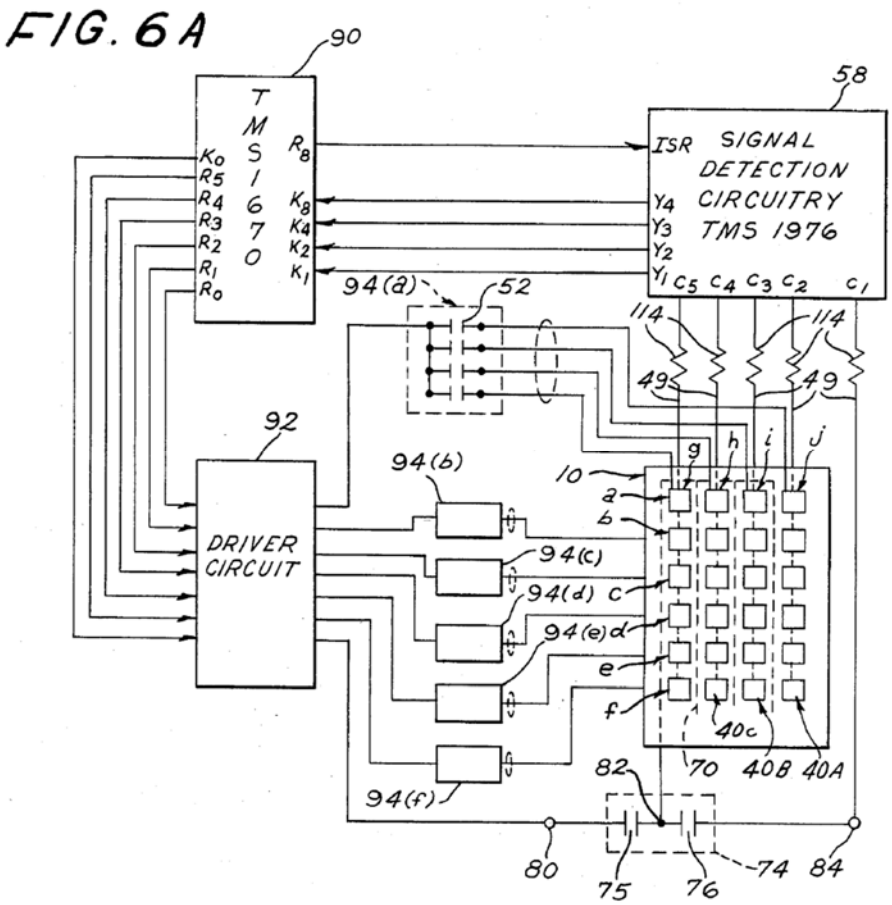

Figure 6A is a simplified schematic circuit diagram of an exemplary touch switch arrangement of Chiu. *Id.* at 3:38–41.

Chiu describes that, in the control circuit depicted in Figure 6A, microprocessor 90 sequentially generates a scan pulse at each of outputs R_0–R_5, which are coupled to rows a–f of the capacitive touch cell array 10 via driver circuitry 92. *Id.* at 8:45–49. According to Chiu, in this embodiment, microprocessor 90 is a commercially available TMS 1670 microprocessor, which can be customized by configuring its read only memory (ROM) to implement the desired control scheme. *Id.* at 9:7–12. Chiu describes that a portion of the ROM of microprocessor 90 is configured to generate the capacitive touch keyboard drive signals, which are scan pulses provided sequentially at outputs R_0–R_5 of microprocessor 90. *Id.* at 9:12–18.

Figure 7 of Chiu is reproduced below.

FIG. 7

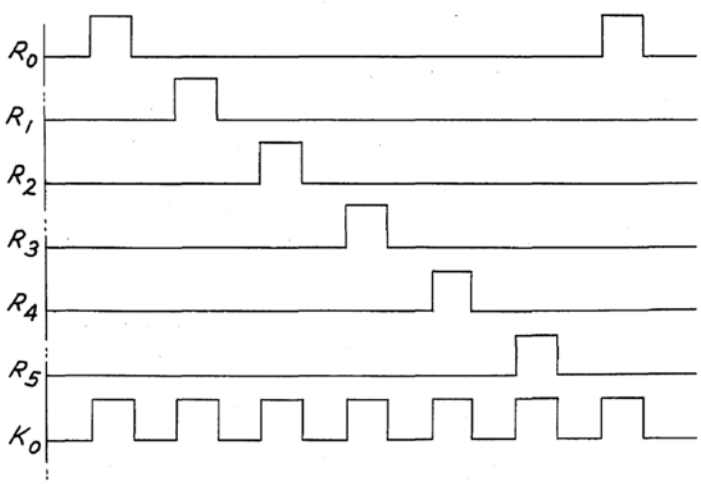

Figure 7 is a timing diagram illustrating the scan signals used in the control circuit depicted in Figure 6A. *Id.* at 3:45–46. According to Chiu, the timing diagram shown in Figure 7 represents one complete scan cycle.

Id. at 10:30–31. Chiu describes that, during each scan cycle, a scan pulse appears sequentially at each of outputs R_0–R_5.

According to Chiu, as shown in Figure 6A, columns g–j of the touch cell array are coupled to inputs C_5–C_2, respectively, of detection circuitry 58 via limiting resistors 114. *Id.* at 8:56–58. Detection circuitry 58 senses the scan signal at each of the touch cells in the row being scanned by checking their respective column output lines 49 to detect an attenuation of the column output line signal, signifying that a touch pad in a particular column has been touched. *Id.* at 8:63–67. If a touch pad in the row being scanned is touched, the signal detector circuit will detect the attenuation of the scanned signal for that column containing the touched pad. *Id.* at 8:67–9:3. Chiu describes that, in this fashion, a pad in the touch cell array that has been touched is identified by row and column. *Id.* at 9:5–6.

3. Overview of Schwarzbach (Ex. 1014)

Schwarzbach describes an appliance control system including a central control unit. Ex. 1014, [57]. Figure 1 of Schwarzbach is reproduced below.

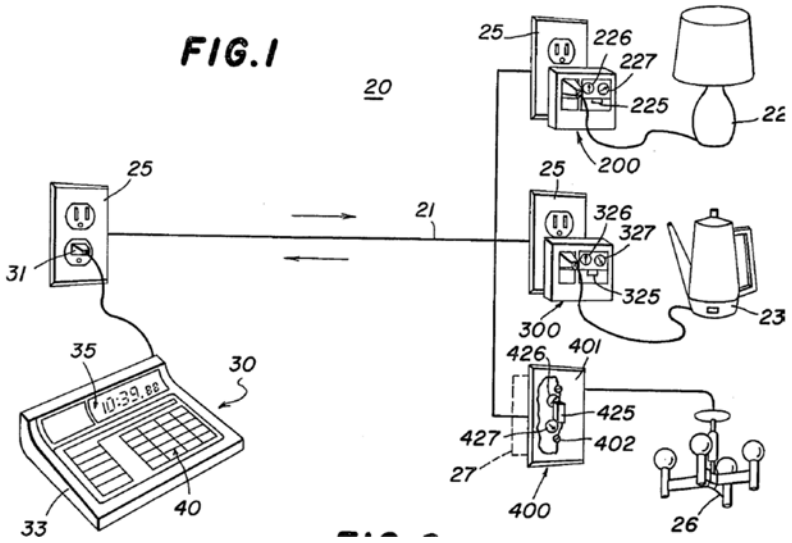

Figure 1 describes an exemplary appliance control system according to Schwarzbach. *Id.* at 3:8–10. As shown in Figure 1, system 20 includes central control unit 30, one or more lamp slave units 200, one or more appliance slave units 300, and one or more wall switch slave units 400.

Figure 4B of Schwarzbach is reproduced below.

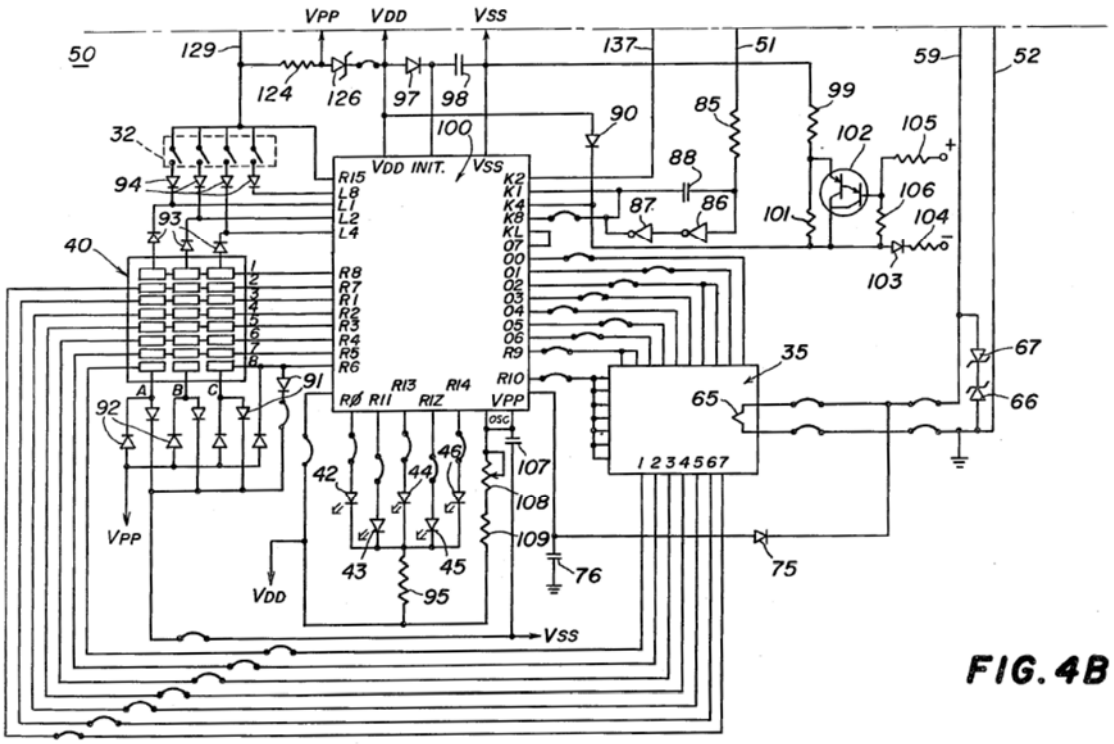

Figure 4B is a schematic circuit diagram of the electrical circuit in the central control unit depicted in Figure 1. *Id.* at 3:18–20.

As shown in Figure 4B, electrical circuit 50 of central control unit 30 includes microprocessor 100. *Id.* at 4:9–11. Schwarzbach describes that microprocessor 100 is preferably a TMS 1670 microprocessor. *Id.* at 15:62. Central control unit 30 also includes keyboard 40 which is coupled to display panel 35 and to microprocessor 100. *Id.* at 4:50–52. Keyboard 40 is connected as a 3x8 matrix, with its row pins connected to corresponding

microprocessor output terminals. *Id.* at 4:55–58. Key presses are detected by driving output terminals and scanning for closed keys. *Id.* at 4:58–67. When a key closure is detected, microprocessor 100 takes the appropriate action after the end of the keyboard scan. *Id.* at 4:67–5:1.

4. Independent Claims 40 and 61

Independent claims 40 and 61 recite identical or nearly identical limitations. Thus, in what follows, we discuss these two independent claims together.

Claims 40 and 61 each recite "an oscillator providing a periodic output signal having a predefined frequency" and "a microcontroller using the periodic output signal from the oscillator." Ex. 1001, Reexam. Cert. C2, 1:25–28 (claim 40), 3:38–41 (claim 61). The claims also recite limitations with identical claim language as follows (the "decrease impedance limitation"):

> wherein said predefined frequency of said oscillator and said signal output frequencies are selected to decrease a first impedance of said dielectric substrate relative to a second impedance of any contaminate that may create an electrical path on said dielectric substrate between said adjacent areas defined by the plurality of small sized input touch terminals

Id., Reexam. Cert. C2, 1:46–52 (claim 40), 3:60–66 (claim 61). To teach all three limitations quoted above, Petitioner relies on the combination of Chiu and Schwarzbach. Pet. 25–26, 43–45.

First, Petitioner contends that Schwarzbach teaches an "oscillator" with a "predefined frequency" of 150 kHz (*id.* at 25–26 (citing Ex. 1014, 9:8–32)) because Schwarzbach describes a TMS 1670 microprocessor

including a "transmitter/modulator" that functions as a "150 KHz oscillator" (*id.* at 53 (citing Ex. 1014, 8:24–9:32)). Petitioner asserts that Schwarzbach's "transmitter/modulator" generates a carrier wave, which is pulse-width modulated to produce coded signals. *Id.* at 25–26 (citing Ex. 1014, 9:8–32). Citing the testimony of Dr. Wright, Petitioner argues that because Schwarzbach describes the coded signals as a "wave form," a person of ordinary skill in the art would have understood the coded signals to be a "periodic output signal." *Id.* at 26 (citing Ex. 1003 ¶ 91).

Next, to teach "a microcontroller using the periodic output signal from the oscillator," Petitioner combines microprocessor 90 of Chiu with the "transmitter/modulator" of Schwarzbach that functions as a 150 kHz oscillator. *Id.* Petitioner asserts that, because both Chiu and Schwarzbach use the same TMS 1670 microprocessor, a person of ordinary skill in the art would have understood that Chiu's microprocessor to "also include these features," i.e., a "transmitter/modulator" that functions as a 150 kHz oscillator. *Id.* (citing Ex. 1005, 9:7–9; Ex. 1014, 15:62–63; Ex. 1003 ¶ 91). Citing the testimony of Dr. Wright, Petitioner contends that a person of ordinary skill in the art would have understood that the "transmitter/modulator" described in Schwarzbach to be the "signal generator circuitry" of the identical TMS 1670 microprocessor described in Chiu. *Id.* at 53 (citing Ex. 1014, 8:24-9:32; Ex. 1003 ¶ 125).

Lastly, Petitioner contends that Schwarzbach also teaches a "predefined frequency" that is "selected to decrease a first impedance of [the] dielectric substrate," as recited in claims 40 and 61, because the 150 kHz frequency of Schwarzbach's oscillator falls within the frequency

range of "150 kHz and above" described in the '183 patent to provide increased immunity to cross-coupling. *Id.* at 43 (citing Ex. 1014, 9:8–32; Ex. 1001, 11:19–37, 8:9–11:59). Referencing Figure 3A of the '183 patent, Petitioner asserts that the '183 patent describes that the impedance of the dielectric decreases when the frequency of the oscillator is increased. *Id.* at 43–44 (citing Ex. 1001, 10:31–34, Fig. 3A; Ex. 1003 ¶ 114). Petitioner argues that

> because Schwarzbach's oscillator frequency is selected in the frequency range taught by the '183 patent to increase the cross-coupling immunity by decreasing the impedance of the dielectric, a touch circuit of the Chiu/Schwarzbach combination would also have the effect of decreasing the impedance of the dielectric.

Id. at 44–45 (citing Ex. 1001, 11:19–37, 8:9–11:59, Fig. 3A; Ex. 1014, 9:8–32; Ex. 1003 ¶ 114).

We are not persuaded by Petitioner's arguments and evidence for several reasons. First, addressing Petitioner's contention that Schwarzbach teaches a TMS 1670 microprocessor *including* a "transmitter/modulator" that functions as a "150 KHz oscillator" (*id.* at 25–26 (citing Ex. 1014, 9:8–32), 53 (citing Ex. 1014, 8:24–9:32)), we discern no disclosure in Schwarzbach that transmitter/modulator 110 is included in the TMS 1670 microprocessor. Rather, in the portion of Schwarzbach cited by Petitioner, Schwarzbach describes that "[t]he *central control unit 30* also *includes a transmitter/modulator*, generally designated by the numeral 110, for transmitting signals to the remote slave units 200, 300 and 400." Ex. 1014, Fig. 4A, 8:21–26 (emphases added). As discussed above in Section III.C.3 (Overview of Schwarzbach), Figures 1 and 4B of Schwarzbach describe that

central control unit 30 is a controller box that includes electrical circuit 50, which in turn includes a TMS 1670 microprocessor. *Id.*, 3:66–4:1, 4:9–11, Figs. 1 & 4B. Although Figure 4B shows that the TMS 1670 microprocessor is included in electrical circuit 50 of Schwarzbach, there is no indication in Schwarzbach that transmitter/modulator 110 is included in the TMS 1670 microprocessor, as Petitioner contends. Instead, it is an entirely separate circuit depicted in Figure 4A.

In his Declaration, Dr. Wright opines that a person of ordinary skill in the art would have understood the "transmitter/modulator" described in Schwarzbach to be the "signal generator circuitry" of the identical TMS 1670 microprocessor described in Chiu. Ex. 1003 ¶ 125 (citing Ex. 1014, 8:24–9:32). As discussed above, we discern no disclosure in the portion of Schwarzbach cited by Dr. Wright that transmitter/modulator 110 is part of the TMS 1670 microprocessor. We are not persuaded by Dr. Wright's testimony because Dr. Wright does not explain adequately how the cited portion of Schwarzbach discloses that transmitter/modulator 110 is the "signal generator circuitry" of the TMS 1670 microprocessor.

Next, Patent Owner argues that Schwarzbach's 150 kHz signal is a carrier frequency used to send coded communication signals and, as such, the signal is not used in any way to generate signals used to activate touch terminals. Prelim. Resp. 33 (citing Ex. 1014, 9:20–24; Ex. 2002 ¶ 57).

We agree with Patent Owner's argument. In the portion of Schwarzbach cited by Petitioner (and Patent Owner), Schwarzbach describes that the 150 kHz signal generated by Schwarzbach's transmitter/modulator is a carrier frequency used to send messages (coded communication signals) to

the remote slave units. *See, e.g.*, Ex. 1014, 8:21–26, 9:20–24. Petitioner does not explain adequately how Chiu's microprocessor (the claimed "microcontroller") would use Schwarzbach's communication signals to Schwarzbach's remote slave units (the claimed "periodic output signal") to drive or activate Chiu's touch pad, as required in claims 40 and 61.

Turning next to the "decrease impedance limitation," Petitioner does not explain adequately *how* or *why* Chiu and Schwarzbach would be combined to produce the claimed invention. *See TriVascular, Inc. v. Samuels*, 812 F.3d 1056, 1066 (Fed. Cir. 2016). First, Petitioner does not identify any teaching or suggestion in Chiu or Schwarzbach that Schwarzbach's 150 kHz communication signal is used "to decrease a first impedance of said dielectric substrate relative to a second impedance of any contaminate," as recited in the claims. The only evidence of record Petitioner cites as teaching the claimed decreasing impedance feature is the '183 patent itself. *See* Pet. 43–45 (citing Ex. 1001, 10:31–34, 11:19–37, 8:9–11:59, Fig. 3A). Thus, Petitioner does not explain adequately *how* a person of ordinary skill in the art would have combined Chiu and Schwarzbach to achieve the claimed decreasing impedance missing from both references.

In addition, Petitioner does not explain sufficiently *why* a person of ordinary skill in the art would have been motivated to combine Chiu with Schwarzbach to achieve the claimed decreasing impedance. The only reasons to combine the references articulated in the Petition relate to combining Chiu's touch circuit with Schwarzbach's supply voltage applied to the TMS 1670 microprocessor and Schwarzbach's battery power used in

the event of power failure. Pet. 17–19. Thus, Petitioner does not explain adequately why a person of ordinary skill in the art would have been motivated to combine Chiu's touch pad circuit with Schwarzbach's 150 kHz communication signal to achieve the claimed decreasing impedance feature.

As discussed above, the only record evidence regarding the use of high frequency signals to achieve decreased impedance is found in the Specification of the '183 patent. But "[t]he inventor's own path itself never leads to a conclusion of obviousness; that is hindsight. What matters is the path that the person of ordinary skill in the art would have followed, as evidenced by the pertinent prior art." *Otsuka Pharm. Co., Ltd. v. Sandoz, Inc.*, 678 F.3d 1280, 1296 (Fed. Cir. 2012). Thus, we are not persuaded that Petitioner has provided a sufficient rationale for combining Chiu and Schwarzbach to achieve the decreasing impedance feature recited in the claims.

Based on the foregoing and the record presented, the information presented in the Petition does not demonstrate a reasonable likelihood of Petitioner prevailing in its challenge to independent claims 40 and 61 under 35 U.S.C. § 103(a) as obvious over the combination of Chiu and Schwarzbach.

5. Dependent Claims 45, 47, 48, 62–64, and 66

Claims 45, 47, and 48 depend from claim 40, and claims 62–64, and 66 depend from claim 61. Petitioner's arguments and evidence presented with respect to these dependent claims only address the additionally recited limitation of these claims, and, therefore, do not remedy the deficiencies in

Petitioner's analysis of independent claims 40 and 61 discussed above. *See* Pet. 45–51, 55–56.

Therefore, based on the record presented, Petitioner does not demonstrate a reasonable likelihood of prevailing in its challenge to dependent claims 45, 47, 48, 62–64, and 66 under 35 U.S.C. § 103(a) as obvious over the combination of Chiu and Schwarzbach.

D. Remaining Obviousness Grounds

In the remaining asserted grounds of obviousness, Petitioner challenges a handful of dependent claims based on Chiu and Schwarzbach further combined with Meadows (claims 41–43 and 67–69) or Ingraham '548 (claim 65). Pet. 56–65. Petitioner's arguments and evidence presented in these grounds only address the additionally recited limitation of these dependent claims, and, therefore, do not remedy the deficiencies in Petitioner's analysis of independent claims 40 and 61 discussed above. *See id.*

Therefore, based on the record presented, Petitioner does not demonstrate a reasonable likelihood that Petitioner would prevail in establishing that claims 41–43 and 67–69 are unpatentable as obvious over Chiu, Schwarzbach, and Meadows or that claim 65 is unpatentable as obvious over Chiu, Schwarzbach, and Ingraham '548.

E. Discretionary Non-Institution Under 35 U.S.C. § 314(a)

Patent Owner asserts that the Board should exercise its discretion to deny the Petition under 35 U.S.C. § 314(a) based on the Samsung IPR challenging the same claims of the '183 patent at issue in this case. Prelim.

Resp. 15–23; Paper 10. The Samsung IPR involves a challenge to claims 37–41, 43, 45, 47, 48, 61–67, 69, 83–86, 88, 90, 91, 94, 96, 97, 99, 101, and 102 of the ’183 patent. Samsung IPR, Paper 35, 2. Petitioner also challenges these claims, either in the instant Petition or in other concurrently filed petitions for *inter partes* review identified above. Because we deny the Petition on the merits, we need not determine whether it also would be appropriate to deny pursuant to our discretion.

IV. CONCLUSION

Based on the arguments and evidence presented in the Petition, we conclude Petitioner has not demonstrated a reasonable likelihood that Petitioner would prevail in showing at least one of the challenged claims of the ’183 patent is unpatentable based on any asserted ground of unpatentability. Therefore, we do not institute an *inter partes* review with respect to any of the challenged claims of the ’183 patent.

V. ORDER

In consideration of the foregoing, it is hereby:

ORDERED that Petitioner’s request for an *inter partes* review is *denied* as to all challenged claims of the ’183 patent, and no trial is instituted.

PETITIONER

W. Karl Renner
Jeremy Monaldo
Daniel D. Smith
FISH & RICHARDSON P.C.
axf-ptab@fr.com
jjm@fr.com
dsmith@fr.com

PATENT OWNER

Joseph A. Rhoa
Jonathan A. Roberts
NIXON & VANDERHYE P.C.
jar@nixonvan.com
jr@nixonvan.com