Trials@uspto.gov
571.272.7822

Paper No. 66
Filed: December 20, 2017

UNITED STATES PATENT AND TRADEMARK OFFICE

BEFORE THE PATENT TRIAL AND APPEAL BOARD

JUNIPER NETWORKS, INC.,
RUCKUS WIRELESS, INC.,
BROCADE COMMUNICATION
SYSTEMS, INC., and NETGEAR, INC,
Petitioner,

v.

CHRIMAR SYSTEMS, INC.,
Patent Owner.

Case IPR2016-01391[1]
Patent 8,942,107 B2

Before KARL D. EASTHOM, GREGG I. ANDERSON, and ROBERT J. WEINSCHENK, *Administrative Patent Judges*.

ANDERSON, *Administrative Patent Judge.*

FINAL WRITTEN DECISION
35 U.S.C. § 318(a) and 37 C.F.R. § 42.73

[1] Ruckus Wireless, Inc., Brocade Communication Systems, Inc., and Netgear, Inc. filed a petition in (now terminated) IPR2017-00718, who have been joined to the instant proceeding. Paper 25.

I. INTRODUCTION

Juniper Networks, Inc. ("Petitioner") filed a Petition (Paper 1, "Pet.") pursuant to 35 U.S.C. §§ 311–19 to institute an *inter partes* review of claims 1, 5, 31, 43, 70, 72, 74, 75, 83, 103, 104, 111, 123, and 125 ("the challenged claims") of U.S. Patent No. 8,942,107 B2 ("the '107 patent," Ex. 1001), filed February 10, 2012.[2] ChriMar Systems, Inc. ("Patent Owner") filed a Preliminary Response ("Prelim. Resp.," Paper 7). We instituted an *inter partes* review of the challenged claims (Paper 9, "Institution Decision" or "Inst. Dec."). We then joined the other three Petitioner parties listed above. *See* note 1; Paper 25. Patent Owner filed a Response ("PO Resp.," Paper 26) and Petitioner filed a Reply ("Pet. Reply," Paper 33). The Board filed a transcription of the Final Hearing held on August 31, 2017. (Paper 63, "Tr.").

Petitioner relies on, *inter alia*, First Declaration of Ian Crayford ("First Crayford Decl.," Ex. 1002) filed with the Petition and Second Declaration of Ian Crayford ("Second Crayford Decl.," Ex. 1046) filed with its Reply. A Third Declaration of Ian Crayford authenticates certain exhibits[3] (Ex. 1048). Patent Owner took a first deposition of Mr. Crayford ("First Crayford Deposition," "First Crayford Dep.," Ex. 2039) and a second

---

[2] The cover page of the '107 patent alleges it is a "[C]ontinuation of application No. 12/239,001, filed on Sep. 26, 2008, now Pat. No. 8,155,012, which is a continuation of application No. 10/668,708, filed on Sep. 23, 2003, now Pat. No. 7,457,250, which is a continuation of application No. 09/370,430, filed on Aug. 9, 1999, now Pat. No. 6,650,622, which is a continuation-in-part of application No. PCT/US99/07846, filed on Apr. 8, 1999." Ex. 1001 (63). A provisional application was filed April 10, 1998. *Id.* (1).

[3] Exhibits 1021–1024, 1030, 1031, and 1035–1042.

deposition of Mr. Crayford ("Second Crayford Deposition," "Second Crayford Dep.," Ex. 2055) for which it filed Observations ("Obs.," Paper 44) and Petitioner filed an Opposition to Observations ("Opp. Obs.," Paper 55).

Patent Owner relies on, *inter alia*, a Declaration by Dr. Vijay K. Madisetti ("Madisetti Decl.," Ex. 2038) filed with its Response. Petitioner took the deposition of Dr. Madisetti ("Madisetti Deposition," "Madisetti Dep.," Ex. 1020).

Petitioner's Motion to Exclude (Paper 46) is *denied*. Patent Owner's Motion to Exclude (Paper 45) is *denied-in-part and dismissed-in-part*. Patent Owner's Motion to Strike Petitioner's Reply (Paper 47) is *denied*.

The Board has jurisdiction under 35 U.S.C. § 6. This Final Written Decision issues pursuant to 35 U.S.C. § 318(a) and 37 C.F.R. § 42.73. For the reasons that follow, we determine that Petitioner has shown by a preponderance of the evidence that the challenged claims are unpatentable.

A. Related Proceedings

Petitioner advises us that the '107 patent is the subject of fifty one (51) civil actions filed in the Eastern District of Michigan, Eastern District of Texas, and Northern District of California. Pet. 1 (citing *Docket Navigator* printout dated July 7, 2016, Ex. 1012). Petitioner is a defendant in *Chrimar Systems, Inc., et al. v. Juniper Networks, Inc.*, Case No. 3:16-cv-558 (N.D. Cal.).[4] *Id.* The '107 patent was the subject of a now terminated *inter partes* review, *AMX, LLC, and Dell Inc. v. Chrimar Systems, Inc.*, IPR2016-00569 ("'569 IPR"). *Id.* [5]

[4] Patent Owner advises us that this lawsuit is stayed. Prelim. Resp. 3.
[5] We instituted trial in the '569 IPR on August 10, 2016. '569 IPR, Paper

Patent Owner identifies nineteen (19) related actions. Paper 6, 2–3. Patent Owner cites specifically to *Chrimar Systems, Inc., et al. v. ADTRAN, Inc., et al.*, Civil Action No. 6:15-cv-618-JRG-JDL (E.D. Tex.) (the '618 lawsuit"), *Chrimar Systems, Inc., et al. v. Alcatel-Lucent, et al.*, Civil Action No. 6:15-cv-163-JDL (E.D. Tex.) (the "'163 lawsuit"), and *Chrimar Systems, Inc., et al. v. AMX LLC.*, No. 6:13-cv-881-JDL (E.D. Tex.) (the "'881 lawsuit") (collectively the "District Court") as having construed several terms of the '107 patent and several of Patent Owner's related patents sharing a common specification. Prelim. Resp. 3 n4, 12–13. The Patent Owner indicates that the following petitions for *inter partes* review are related to this case:

Case No.	**Involved U.S. Patent No.**
IPR2016-00569 (*see* n.5)	U.S. Patent No. 8,942,107
IPR2016-00573	U.S. Patent No. 9,019,838
IPR2016-00574	U.S. Patent No. 8,902,760
IPR2016-00983	U.S. Patent No. 8,155,012
IPR2016-01151	U.S. Patent No. 9,019,838
IPR2016-01389	U.S. Patent No. 8,155,012
IPR2016-01397	U.S. Patent No. 9,019,838
IPR2016-01399	U.S. Patent No. 8,902,760
IPR2016-01425	U.S. Patent No. 8,155,012
IPR2016-01426	U.S. Patent No. 9,019,838

Paper 6, 3.

19. Trial was terminated as to Petitioner AMX LLC only on November 9, 2016. *Id.* at Paper 27. Petitioner Dell Inc. was terminated on January 20, 2017, terminating the proceeding. *Id.* at Paper 40.

B. Technology and the ’107 Patent

1. Technology

The ’107 patent “relates generally to computer networks and, more particularly, to a network management and security system for managing, tracking, and identifying remotely located electronic equipment on a network.” Ex. 1001, col. 1, ll. 27–30. The ’107 patent is “adapted to be used with an existing Ethernet communications link or equivalents thereof.” *Id.* at col. 3, ll. 41–43.

2. The ’107 Patent (Ex. 1001)

The ’107 patent describes a communication system that generates and monitors data relating to the electronic equipment, and can for example use the “pre-existing wiring or cables that connect pieces of networked computer equipment to a network.” Ex. 1001, col. 3, ll. 24–27. In a first embodiment, the system includes a remote module attached to the electronic equipment being monitored. *Id.* at col. 3, ll. 27–30. The remote module transmits a low frequency signal containing equipment information to a central module over the cable. *Id.*

The communication or monitoring of the network equipment can be accomplished “over preexisting network wiring or cables without disturbing network communications.” Ex. 1001, col. 12, ll. 1–7. This is accomplished “by coupling a signal that does not have substantial frequency components within the frequency band of network communications.” *Id.* For example, a high frequency network such as an Ethernet network operates at higher frequencies of between 5 MHz to 10 MHz. *Id.* at col. 12, ll. 19–23. A

lower frequency signal on the order of 150 kHz may use the same networking wires or cables as the higher frequency network communications with "no disruption of the high frequency network information." *Id.* at col. 12, ll. 19–28.

C. Illustrative Claims

Of the challenged claims, claims 1 and 104 are independent apparatus claims. Claims 5, 31, 43, 70, 72, 74, 75, 83, and 103 depend directly or indirectly from claim 1. Claims 111, 123, and 125 depend from claim 104. Claim 1 is reproduced below:

1. A piece of Ethernet terminal equipment comprising:

an Ethernet connector comprising:

first and second pairs of contacts used to carry Ethernet communication signals,

at least one path for the purpose of drawing DC current, the at least one path coupled across at least one of the contacts of the first pair of contacts and at least one of the contacts of the second pair of contacts, the piece of Ethernet terminal equipment to draw different magnitudes of DC current flow via the at least one path,

the different magnitudes of DC current flow to result from at least one condition applied to at least one of the contacts of the first and second pairs of contacts,

wherein at least one of the magnitudes of the DC current flow to convey information about the piece of Ethernet terminal equipment.

Ex. 1001, col. 17, ll. 11–25.

D. Asserted Grounds of Unpatentability

Petitioner challenges claims 1, 5, 31, 43, 53, 58, 70, 72, 75, 83, 84, 103, 104, 111, 123, and 125 of the '107 patent as unpatentable on the following grounds. Pet. 7–66.

References	Basis	Claims Challenged
Hunter[6] and Bulan[7]	§ 103(a)[8]	1, 5, 31, 43, 70, 72, 74, 75, 83, 103, 104, 111, 123, and 125
Bloch,[9] Huizinga,[10] and IEEE 802.3[11]	§ 103(a)	1, 5, 31, 43, 70, 72, 74, 75, 83, 103, 104, 111, 123, and 125

II. ANALYSIS

A. Claim Construction

In an *inter partes* review, claim terms are given their broadest reasonable interpretation in light of the Specification in which they appear. *See* 37 C.F.R. § 42.100(b); *Cuozzo Speed Techs., LLC v. Lee*, 136 S. Ct.

---

[6] WO 96/23377, Richard K. Hunter et al., published August 1, 1996, ("Hunter," Ex. 1003).
[7] US 5,089,927, Sergio Bulan et al., issued February 18, 1992, ("Bulan," Ex. 1004).
[8] The Leahy-Smith America Invents Act (AIA), Pub. L. No. 112-29, 125 Stat. 284, 287–88 (2011), revised 35 U.S.C. § 103, effective March 16, 2013. The '107 patent has an effective filing date of at least April 10, 1998, prior to the effective date of the AIA. *See* Pet. Reply 2. Thus, the grounds asserted are under the pre-AIA version of § 103.
[9] US 4,173,714, Alan Bloch et al., issued November 6, 1979 ("Bloch," Ex. 1005).
[10] US 4,046,972, Donald D. Huizinga et al., issued September 6, 1977 ("Huizinga," Ex. 1009).
[11] IEEE Standard 802.3-1993 ("IEEE-93," Ex. 1006) and IEEE Standard 802.3-1995, Parts 1 and 2 ("IEEE-95," Ex. 1007 (Part 1) and Ex. 1008 (Part 2)), collectively "IEEE 802.3."

2131, 2142 (2016). We presume that claim terms have their ordinary and customary meaning. *See Trivascular, Inc. v. Samuels*, 812 F.3d 1056, 1061-62 (Fed. Cir. 2016) ("Under a broadest reasonable interpretation, words of the claim must be given their plain meaning, unless such meaning is inconsistent with the specification and prosecution history") (internal citation omitted); *In re Translogic Tech., Inc.*, 504 F.3d 1249, 1257 (Fed. Cir. 2007). Any special definition for a claim term must be set forth in the Specification with reasonable clarity, deliberateness, and precision. *In re Paulsen*, 30 F.3d 1475, 1480 (Fed. Cir. 1994). In the absence of such a special definition or other consideration, "limitations are not to be read into the claims from the specification." *In re Van Geuns*, 988 F.2d 1181, 1184 (Fed. Cir. 1993). "[O]nly those terms need be construed that are in controversy, and only to the extent necessary to resolve the controversy." *See Nidec Motor Corp. v. Zhongshan Broad Ocean Motor Co. Ltd.*, 868 F.3d 1013, 1017 (Fed. Cir. 2017); *Vivid Techs., Inc. v. Am. Sci. & Eng'g, Inc.*, 200 F.3d 795, 803 (Fed. Cir. 1999).

Petitioner identifies "powered off" and "BaseT" as requiring construction. Pet. 5–6. Patent Owner identifies those same two terms plus "protocol." PO Resp. 15–18.

The parties have not disputed the meaning of either "Ethernet terminal equipment" or "end device." Patent Owner equates the two terms. *See, e.g.*, PO Resp. 45, Heading A. We apply the ordinary and customary meaning of the claim terms not specifically addressed.

1. "path coupled across" (claims 1 and 104)

Claims 1 and 104 recite, in part, "*at least one path coupled across* at least one of the contacts of the first pair of contacts and at least one of the

contacts of the second pair of contacts." In the Institution Decision we construed the term "path coupled across" to mean "path permitting energy transfer." Inst. Dec. 8. The term is not disputed and we, upon consideration of the full record, maintain the construction from the Institution Decision.

2."pairs of contacts" (claims 1 and 104)

Claims 1 and 104 recite, in part, "an Ethernet connector comprising first and second *pairs of contacts* used to carry Ethernet communication signals, at least one path for the purpose of drawing DC current." In the Institution Decision we construed "pairs of contacts" to mean "at least two contacts which define a path for carrying electrical signals." Inst. Dec. 9. The term is not disputed and we maintain the construction from the Institution Decision.

3."BaseT" (claim 5)

Claim 5 depends from claim 1 and recites additionally "wherein the Ethernet communication signals are BaseT[12] Ethernet communication signals." In the Institution Decision we preliminarily determined that the broadest reasonable construction of "BASE-T," consistent with the specification and the knowledge of a person of ordinary skill in the art, is "twisted pair Ethernet in accordance with the 10BASE-T or 100BASE-T standards." Inst. Dec. 11–12. Patent Owner does not contest this construction. PO Resp. 18. Petitioner's proposed construction is the same as the Institution Decision except that it does not include "twisted pair Ethernet." Pet. 6.

[12] "BaseT," "BASE-T," and "Base-T" are all used in various parts of the record, but we determine they all reference the same Ethernet standard. We use the terms interchangeably here.

In its Preliminary Response, Patent Owner cited to the District Court's construction in the '163 lawsuit. Prelim. Resp. 14 (citing Ex. 2021, 16–18). The District Court construed the term as meaning "twisted pair Ethernet in accordance with the 10BASE-T or 100BASE-T standards." Ex. 2021, 18. We agree with the District Court that the specification lacks any special definition of Base-T. Ex. 2021, 17. The record before the District Court included evidence "that it was commonly known that 'Base' refers to baseband and 'T' designates twisted pair cabling, and that 'BASE-T' standards were known in the art at the time of invention." *Id.* Exhibit 1007, IEEE Standard 802.3-1995, does define "100BASE-T" and "10BASE-T." Ex. 1007 ¶¶ 1.4.2 and 1.4.14. The definition of "100BASE-T" does not include reference to a "twisted pair," while the definition of "10BASE-T" does. *Id.* We agree with the District Court's analysis that "Base-T" references a baseband and a twisted pair cable. Extrinsic dictionary evidence is that 10Base-T and 100Base-T are "an Ethernet standard for baseband LANs (local area networks) using twisted-pair cable." MICROSOFT COMPUTER DICTIONARY, 2 (Microsoft Press 5th ed. 2002) (Ex. 3001).

The parties do not dispute the construction in the Institution Decision. *See* Pet. 6, PO Resp. 18. We maintain our construction from the Institution Decision.

4. "powered off" (claims 103 and 104)

Claim 103 is a multiple dependent claim which, for purposes of this proceeding, depends on challenged claims 1 and 31, and recites "wherein the piece of Ethernet of terminal equipment is a piece of powered-off Ethernet terminal equipment." Claim 104 is an independent claim which recites, in

pertinent part, "[a] powered-off end device" instead of "Ethernet terminal equipment."

In the Institution Decision we interpreted "powered off" to mean "without operating power." Inst. Dec. 10. Petitioner proposed this construction. Pet. 5–6. Patent Owner also agreed with the Institution Decision construction in its Preliminary Response, citing the District Court construction from the '163 lawsuit and our construction in the'569 IPR. Prelim. Resp. 14–15 (citing Ex. 2021, 18–20; '569 IPR, Paper 19, 10); *see also* PO Resp. 16 (citing the same authority).

Petitioner argues "'powered-off' does not mean entirely removed from the application of power." Pet. 6 (citing Ex. 1001, claims 103, 104, 111, 123, and 125; First Crayford Decl. ¶¶ 52–55). In its Response Patent Owner argues that the terminal device cannot be "powered-off" if "operating voltage is applied, but not used." PO Resp. 16. Patent Owner concludes that "[o]ne skilled in the art would understand 'without operating power' to exclude devices that have 'operating power' applied to the Ethernet terminal equipment/end device." *Id.* at 17 (citing Madisetti Decl. ¶ 102). Petitioner argues that some power may be applied to the device and the device is "powered-off." Patent Owner disagrees.

That the "Ethernet terminal device" or "powered-off end device" receive some power is supported by the claims, which recite that the devices draw "different magnitudes of current flow." Ex. 1001, claims 1, 103, 104; *see* PO Resp. 16. The Specification describes the isolation power supply of the central module as providing "continuous direct current (DC) power supply" for the remote module. Ex. 1001, col. 5, ll. 39–43 ("a low current preferably on the order of magnitude of about 1mA.")).

We maintain our construction of "powered-off" from the Institution Decision with the qualification that some power may be applied to the claimed "Ethernet terminal equipment" or "end device" and the devices may still be "powered-off."

5. "protocol" (claims 72 and 123)

Claims 72 and 123 depend from claims 1 and 104, each reciting "wherein at least one magnitude of the DC current is part of a detection protocol." Patent Owner contends "[a] protocol, as defined in the computer networking field, is 'a mutually agreed upon method of communication.'" PO Resp. 17 (citing Madisetti Decl. ¶ 104; Network Working Group, RFC 1462, "What is the Internet," May 1993, 1 (Ex. 2047)). Patent Owner does not cite to the Specification or the claim language to support its construction.

As Petitioner contends, neither "detect" nor "protocol" requires that two devices "agree to a method of communication." Pet. Reply 21–22 (citing Second Crayford Decl. ¶ 90). Petitioner argues as follows:

> Instead, a POSITA understood that "detection" simply requires a discovery of something, and a "protocol" as rules. . . . *In other words, a detection protocol is merely rules for making a discovery.*

The claim language and the Specification support Petitioner's contentions. Claim 72, a device claim, does not require communication with any other device. Any disclosed communication involves control module 15, but claim 72, drawn to "Ethernet terminal equipment," reads on remote module 16a and PC 3a, and does not necessarily encompass the central module. *See* Ex. 1001, col. 8, ll. 33–56, Figs. 4, 5. Further, the claimed device at most only needs to be capable of being part of a detection protocol. *See In re Schreiber*, 128 F.3d 1473, 75–77 (Fed. Cir. 1997).

Accordingly, "wherein at least one magnitude of the DC current is part of a detection protocol" means that the claimed magnitude of DC current must be capable of being part of a "detection protocol," which may involve, but is not limited to, rules for making a discovery or a mutually agreed upon method of communication.

B. Law of Obviousness

A patent claim is unpatentable as obvious if the differences between the claimed subject matter and the prior art are "such that the subject matter as a whole would have been obvious at the time the invention was made to a person having ordinary skill in the art to which said subject matter pertains." 35 U.S.C. § 103(a).

> The ultimate determination of obviousness is a question of law, but that determination is based on underlying factual findings. The underlying factual findings include (1) "the scope and content of the prior art," (2) "differences between the prior art and the claims at issue," (3) "the level of ordinary skill in the pertinent art," and (4) the presence of secondary considerations of nonobviousness such "as commercial success, long felt but unsolved needs, failure of others," and unexpected results.

In re Nuvasive, Inc., 842 F.3d 1376, 1381 (Fed. Cir. 2016) (internal citation omitted) (citing *inter alia Graham v. John Deere Co.*, 383 U.S. 1, 17–18 (1966)).

In assessing the prior art, the Board must consider whether a person of ordinary skill would have had a reason to combine the prior art to achieve the claimed invention. *Nuvasive*, 842 F.3d at 1381. As observed by our reviewing court in *Personal Web Technologies, LLC v. Apple, Inc.*, 848 F.3d 987, 991–92 (Fed. Cir. 2017):

> The Supreme Court in *KSR Int'l Co. v. Teleflex Inc.*, 550 U.S. 398, 127 S.Ct. 1727, 167 L.Ed.2d 705 (2007), explained that,

> "because inventions in most, if not all, instances rely upon building blocks long since uncovered, and claimed discoveries almost of necessity will be combinations of what, in some sense, is already known," "it can be important to identify a reason that would have prompted a person of ordinary skill in the relevant field to combine the elements in the way the claimed new invention does."

1. Level of Ordinary Skill

The Institution Decision substantially tracks Petitioner's proposal. Inst. Dec. 12–13; Pet. 5 (citing First Crayford Decl. ¶¶ 49–51). Patent Owner's only issue with Petitioner's proposal, and our prior determination, is that use of "at least" with respect to education and experience is too open ended because it would include persons having more than ordinary skill. PO Resp. 13–14 (citing Madisetti Decl. ¶ 26).

We agree with Patent Owner. Petitioner does not contest the change in its Reply.[13] We determine the level of ordinary skill at the time of the invention was a person having an undergraduate degree in electrical engineering or computer science, or the equivalent, and three years of experience. In addition, a person of ordinary skill would have had a familiarity with data communications protocols, data communications standards (and standards under development at the time, including the 802.3 standard), and the behavior of data communications products available on the market. Madisetti Decl. ¶ 26.

C. Obviousness over Hunter and Bulan

Petitioner alleges claims 1, 5, 31, 43, 70, 72, 74, 75, 83, 103, 104, 111, 123, and 125 would have been obvious to a person of ordinary skill in the art

[13] At the Final Hearing Petitioner objected to a definition that did not include "at least." Tr. 14:13–19.

over Hunter and Bulan. Pet. 7–42. Petitioner cites the First Crayford Declaration in support of its positions. *See* First Crayford Decl. ¶¶ 63–142. Based on Petitioner's arguments and supporting evidence, we find Petitioner has made its case by a preponderance of the evidence and adopt the Petitioner's reasoning and factual assertions as our factual findings as summarized and discussed below.

1. Hunter (Exhibit 1003)

Hunter discloses "[a] power subsystem and method for providing phantom power and third pair power via a computer network bus." Ex. 1003, Abstract. Phantom power is power that may be routed through the same cable employed to carry data through the network. *Id.* at col. 17, ll. 2–5. "[P]hantom powering [] is employed in current telephone systems." *Id.* "In a preferred embodiment of the first aspect of the present invention, the bus comprises a 10Base-T bus." *Id.* at 21:17–18.

Figure 2 of Hunter is reproduced below.

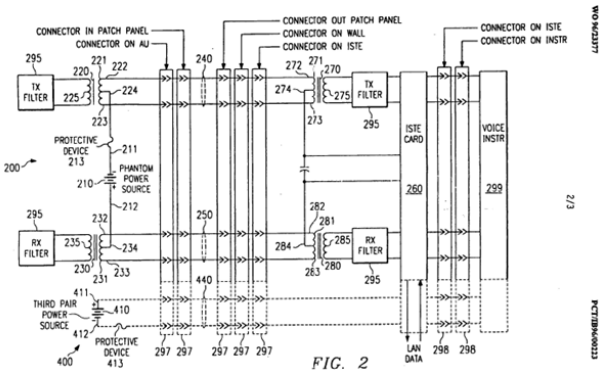

Figure 2 is a schematic diagram of a phantom powering subsystem 200. Ex. 1003, 35:21–23. "The phantom powering subsystem 200 comprises a power supply 210 having a positive output 211 and a negative output 212." *Id.* at 35:27–29. The subsystem also includes first and second transformers 220 and 230 with windings having end taps and center taps

224, 234. *Id.* at 36:1–6. First and second twisted-pair conductors 240 and 250 are connected to the respective end taps of the transformers "to allow data communication there between." *Id.* at 36:7–12. The 10Base-T bus includes the "two twisted-pair conductors 240, 250, each used for unidirectional transmission of data." *Id.* at 37:20–23.

One of the twisted pairs is employed for transmitting data from equipment 260 (Integrated Services Terminal Equipment, "ISTE") "while the other of the twisted pairs (say, 240) is used for receiving data into the equipment 260." Ex. 1003, 23:18–21, 37:22–26. "The subsystem further comprises a protective device 213 coupled to the power supply 210 to prevent power exceeding a desired amount from passing through the protective device 213." *Id.* at 38:12–15.

2. Bulan (Exhibit 1004)

Bulan discloses a current control apparatus for supplying direct current flow from a source of power via a transmission line to a telecommunications terminal so that the telecommunications apparatus is "continuously operable while drawing a load current which is exceeded by an inrush current being greater than the load current at a moment of power up." Ex. 1004, col. 2, ll. 17–23. Bulan's system is used in a network having terminal equipment ("TE") which includes a DC to DC converter ("DC-DC") in a well-known phantom power feed arrangement. *Id.* at col. 1, ll. 52–56, col. 3, ll. 53–56, col. 4, ll. 2–10.

"The current control apparatus is for connection in series between the power source and the transmission line." Ex. 1004, col. 2, ll. 23–25. A current path switch is placed between the power source and the transmission line. *Id.* at col. 4, ll. 17–25.

Figure 2 of Bulan is reproduced below.

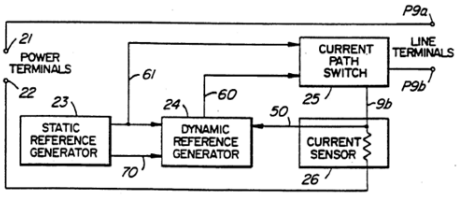

FIG. 2

Figure 2 is a schematic diagram of a line interface circuit for coupling current from the power source. Ex. 1004, col. 4, ll. 17–22. As shown in Figure 2, a static reference generator provides a stable voltage supply on a lead for use by a dynamic reference generator and the current path switch. *Id.* at col. 4, ll. 25–30. The dynamic reference generator generates a control signal for use by the current path switch. *Id.* at col. 4, ll. 33–36. The current path switch is required to provide a current path which at any one time is of a very low impedance, or alternately is of a much higher impedance, in accordance with operation of the TE connected to the network. *Id.* at col. 4, ll. 35–40.

Current exceeding Bulan's static limit, set by the static reference generator, is detected by the current sensor indicating a current inrush condition. Ex. 1004, col. 3, ll. 5–12, col. 4, ll. 23–24, col. 5, ll. 37–39. The dynamic reference generator responds to this magnitude of current by setting a maximum limit on the inrush current. *Id.* at col. 3, ll. 7–12, col. 5, ll. 6–15, ll. 42–46, Fig. 4 (see resistors 52 and 57 and capacitor 53). When the TE's DC-DC has finally completed its startup, the TE can draw operating power and proceed to draw a normal operating current that remains below Bulan's static limit. *Id.* at col. 2, ll. 1–8, col. 3, ll. 5–6.

If "during start up there are several inrushes, the maximum permitted current will return to a high point of slightly more than the current which

was permitted just before the envelope returned to the normal load current level." Ex. 1004, col. 7, ll. 7–13. "This may happen several times, as may be peculiar to the particular terminal equipment being connected to the line." *Id.*

3. Claim 1

Addressing the preamble of claim 1, limitation [a],[14] "[a] piece of Ethernet terminal equipment," Petitioner alleges the ISTE of Hunter is "'Ethernet terminal equipment' because (10Base-T) Ethernet data transmissions can originate and terminate there." Pet. 24 (citing Ex. 1003, 37:19–28 ("[T]he bus [to the ISTE] comprises a 10Base-T bus.")). Petitioner also shows that the TE may include ISTE card 260 coupled to voice instrument 299 and drawing power from the circuit, as explained further below. Pet. 9 (showing TE on the right-hand side of connectors on cards 297 of Hunter's Figure 2), 25–26 (citing equipment in Hunter that draws power); First Crayford Decl. ¶ 102 (discussing "components along the path" of Hunter's Figure 2 (citing Exhibit 1003, 35:27–38:25, Fig. 2)). Petitioner concludes it would have been obvious to a person of ordinary skill in the art to "implement the teachings of Hunter with terminal equipment other than the exemplary ISTE, and/or with a bus applying other Ethernet standards (such as 100Base-T)." *Id.* at 25 (citing Ex. 1003, 16:26–18:1, 19:2–8 ("primary object" to provide "phantom" power "to equipment coupled to a local area network, including, but not limited to, Ethernet®,

[14] Petitioner's convention for identifying the limitations of claim 1 is to bracket them in alphabetical order. Accordingly, the preamble, the first limitation of claim 1, is designated [a]. *See, e.g.*, Pet. 24. We follow the convention for purposes of this Decision.

Token Ring®, ATM, and isoEthernet®."), 21:11–13, 26:7–11, claims 3 ("bus comprises a two-pair twisted-pair bus selected from the group consisting of: "10Base-T, Ethernet®, Token Ring®, ATM, 100Base-T, and isoEthernet®"), claims 13, 29: First Crayford Decl. ¶ 100).

Claim 1 next recites as limitation [b] "an Ethernet connector comprising first and second pairs of contacts used to carry Ethernet communication signals." Hunter teaches that "one of the twisted- pairs (say, 250) is employed for transmitting data from the equipment 260, while the other of the twisted-pairs (say, 240) is used for receiving data into the equipment 260." Ex. 1003, 7:19–26. Petitioner cites the preceding from Hunter as well as Figure 2, reproduced in Section II.C.1 above, as showing "the TE includes an Ethernet connector with a first and second pair of contacts for connecting to each of the two twisted-pairs (which are used to carry both power and Ethernet communication signals)." Pet. 26–27 (citing Ex. 1003, 38:21–25, Fig. 2 ("connectors 297")).

Addressing limitation [c], "at least one path for the purpose of drawing DC current," Petitioner relies on the combined circuit of Hunter and Bulan annotated as "Petition Figure 3" from page 15 of the Petition, which is reproduced below.

PETITION FIGURE 3

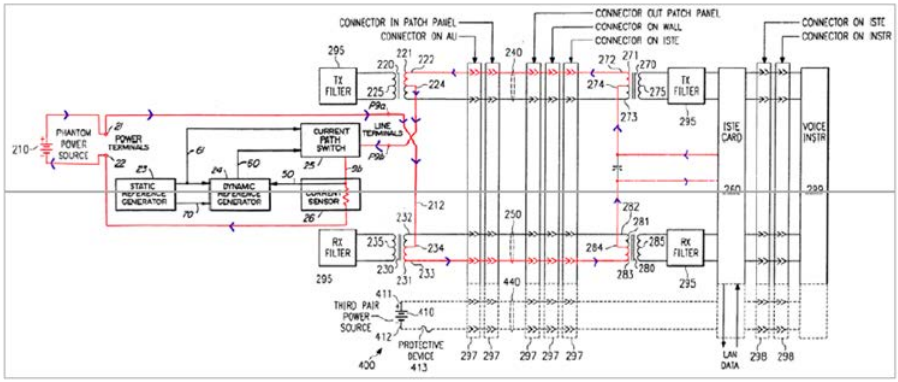

Petition Figure 3 includes Figure 2 of Hunter (reproduced above in Section II.C.1) modified by substituting the current control apparatus from Figure 2 of Bulan (reproduced above in Section II.C.2) for the protective device 213 from Figure 2 of Hunter. Pet. 15 (citing First Crayford Decl. ¶ 77). Petitioner argues "[t]he purpose of Hunter's phantom-powering system is to permit the TE to draw DC current from the same twisted-pairs it uses to communicate Ethernet data." *Id.* at 27 (citing Ex. 1003, 21:27–29 ("each of the twisted-pair conductors as a rail by which to deliver DC power to the equipment"). Referencing Petition Figure 3, Petitioner traces the flow of DC current, shown in red with arrows indicating current direction, from phantom power source 210 to the TE (ISTE Card) and back. *Id.* at 27–28.

Claim 1 next recites as limitation [d], "the at least one path coupled across at least one of the contacts of the first pair of contacts and at least one of the contacts of the second pair of contacts." Petitioner relies on the showing made above for limitation [c], "at least one path for the purpose of drawing DC current." Pet. 28 (citing Ex. First Crayford Decl. ¶ 103). Petitioner cites to its showing regarding coupling of contacts. *Id.*; *see also id.* at 27 (describing the current path "through a contact in 'CONNECTOR ON ISTE' 297 . . . through the TE device . . . through the TE's 'center tap 274,' through a contact in 'CONNECTOR ON ISTE' 297 . . . ").

Addressing limitation [e] of claim 1, the "piece of Ethernet equipment to draw different magnitudes of DC current flow via the at least one path" recited in claim 1, Petitioner argues both Hunter and Bulan have a DC-to-DC-converter ("DC-DC"). Pet. 28 (citing Ex. 1003, 39:5–6; Ex. 1004, col. 1, ll. 52–56). The First Crayford Declaration states that the DC-DC converters of the references are "to convert the phantom power supplied via

the twisted-pair Ethernet cable into suitable operating power for the TE." First Crayford Decl. ¶ 104. Petitioner relies on the preceding to meet the recited limitation because both references include DC-DC and because the TE's "current draw is regulated by the Bulan current control apparatus in the Hub, the TE will draw <u>different magnitudes of DC current flow</u> via the at least one path." Pet. 28–29.

More specifically, Petitioner asserts that when power is first applied to Bulan's current control circuit the DC-DC will draw an inrush of current which rises to the static current limit and then to the dynamic current limit. Pet. 29 (citing Ex. 1004, col. 1, ll. 57–65 ("[t]he surge of current ... required to initiate operation of the typical [DC-DC]"), col. 3, ll. 3–12 (static and dynamic current limits), col. 5, ll. 36–46, col. 6, ll. 36–38). Petitioner asserts that Bulan then switches to high impedance in the current path, forcing the current to a "trickle" level and then to zero. *Id.* at 29 (citing Ex. 1004, col. 3, ll. 13–21, col. 4,ll. 35–40, col. 6, ll. 36–51). In the next step of its showing, Petitioner argues Bulan determines that when the current in the circuit goes to zero it is indicative of the DC-DC startup and not an operational fault, like a short circuit, which would continue to draw a trickle current. *Id.* at 29–30 (citing Ex. 1004, col. 1, ll. 23–29, col. 1, ll. 57–65, col. 2, ll. 1–14, col. 3, ll. 22–25, col. 6, ll. 46–51). Petitioner concludes that Bulan draws different magnitudes of DC current by switching the high impedance out of the current path so the DC-DC may startup, reaching "the normal operating current level of the TE" if current stays within the static and dynamic limits." *Id.* at 30. Alternatively, Petitioner argues if the static and dynamic limits are exceeded, then further iterations are done until the DC-DC completes startup. *Id.* (citing Ex. 1004, col. 4, ll. 67–5:1, col. 6, ll. 52–58,

col. 6, l. 65–col. 7, l. 14 "This may happen several times, as may be peculiar to the particular terminal equipment being connected to the line.").

The next limitation of claim 1, limitation [f], recites the "the different magnitudes of DC current flow to result from at least one condition applied to at least one of the contacts of the first and second pairs of contacts." Petitioner argues the different magnitudes of current flow discussed above in analyzing the "piece of Ethernet equipment to draw different magnitudes of DC current flow via the at least one path" limitation of claim 1 all result from "conditions applied to at least one of the contacts of the first and second pairs of contacts." Pet. 30 (citing First Crayford Decl. ¶¶ 109–113). For example, Petitioner points out that plugging the phantom-powered twisted-pair Ethernet cable into the TE "is a condition applied to the contacts: e.g., current then begins to flow through them." *Id.* at 31.

The last limitation of claim 1 is limitation [g], "wherein at least one of the magnitudes of the DC current flow to convey information about the piece of Ethernet terminal equipment." Petitioner argues Bulan monitors the different magnitudes of DC current flow drawn by the TE. Pet. 31 (citing Ex. 1004, col. 4,ll. 23–24, col. 2, ll. 1–14; First Crayford Decl. ¶¶ 114–118). For example, at startup if the current drawn by the TE exceeds the static limit and then the dynamic limit"

> this conveys to Bulan that a potentially dangerous current "inrush" is occurring at the TE—though Bulan does not yet know whether the inrush is merely "the surge required to initiate operation of the typical [DC-DC]" in the TE (which should be permitted), or the presence of an "unintended operational fault[]" such as a "short circuit[]."

Id. at 32 (citing Ex. 1004, col. 1, ll. 60–62, col. 1, ll. 28–29, Abstract, col. 3, ll. 5–6, col. 3, ll. 7–12). As discussed above, Petitioner argues Bulan responds by switching a high impedance into the path. *Id.* (citing Ex. 1004, col. 3, ll. 13–21, col. 4, ll. 35–40, col. 6, ll. 36–44).

Patent Owner alleges Petitioner's citation to "Ethernet®" has not been explained as relevant to the claimed invention. PO Resp. 34 (citing Ex.1003 12, 14, 21, 23, 28, 35, 36). Patent Owner also contends that the term "Ethernet®" in Hunter refers to the original trademarked version of Ethernet owned by Xerox Corporation, not the subsequent non-trademarked versions of Ethernet, such as 10Base-T and 100Base-T. *Id.* (citing Pet. 26; First Crayford Decl. ¶100, n. 6.)

Patent Owner's argument is not persuasive. Hunter "discloses 10Base-T, 100Base-T4, and isoEthernet standards that all teach the 'Ethernet' limitation." Pet. Reply 11 (citing Pet. 24–26). For example, Hunter teaches the following:

> *In the illustrated embodiment, the bus comprises a 10Base-T bus. A l0Base-T bus conventionally comprises two twisted-pair conductors 240, 250, each used for unidirectional transmission of data.* Thus, in this embodiment, one of the twisted pairs (say, 250) is employed for transmitting data from the equipment 260, while the other of the twisted-pairs (say, 240) is used for receiving data into the equipment 260. The present invention preferably employs each of the twisted-pair conductors as a rail by which to deliver DC power to the equipment 260.

Ex. 1003, 37:19–28 (emphasis added). Patent Owner does not dispute that the term 10Base-T and 100Base-T teach "Ethernet." PO Resp. 18. Thus,

regardless of whether Hunter's use of the term "Ethernet®" includes 10Base-T, Hunter independently teaches 10Base-T.[15] *Id.*

Patent Owner argues that the Integrated Services Terminal Equipment (ISTE) card of Hunter is an interconnecting "hub[]" and not claim 1's "Ethernet terminal equipment" and claim 104's "end device." PO Resp. 34–39; *see also id.* at 45–46 (making same argument). Patent Owner alleges that the only terminal equipment in Figure 2 of Hunter is voice instrument 299. *Id.* at 35. According to Patent Owner, when Figures 1 and 2 of Hunter are considered together, those figures "show phantom-power being delivered from a multimedia Hub ('120' in Hunter's Figure 1) through multiple connectors (each labelled '297' in Hunter's Figure 2) to an intermediate Hub ('150' in Hunter's Figure 1)." *Id.* at 37 (citing Ex. 2038 ¶ 71). Patent Owner concludes that "Hunter's phantom-power circuit does not connect to the phones ('end devices'), which are connected to the intermediate Hub through separate connectors (each labelled '298' in Hunter's Figure 2)." *Id.*

Patent Owner's argument is not persuasive. Patent Owner's argument focuses on the specific configuration shown in Figure 2 of Hunter. PO Resp. 34–39. Petitioner asserts Hunter is not limited to the configuration shown in Figure 2. *See, e.g.*, Pet. 25 (obvious to implement "Hunter with terminal equipment other than the exemplary ISTE"). Even were Hunter so limited, we agree with Petitioner and find that Hunter teaches both recited terms, "terminal equipment" and "end device," through its teaching of an Integrated Services Terminal Equipment (ISTE) card that "receives and transmits data over a 10Base-T bus." *See* Pet. Reply 11–12 (citing Pet. 24–26); *see also*

[15] There is no dispute that 10Base-T is an IEEE Ethernet standard. First Crayford Decl. ¶ 98 n.5; Madisetti Decl. ¶ 32.

Ex. 1003, 23:19–20 ("Integrated Services Terminal Equipment (ISTE)"); Petition Figure 3 above (showing the ISTE).

The ISTE of Hunter is "terminal equipment," as the name itself suggests. Hunter's Figure 2 depicts an "isoEthernet system where the ISTE splits isoEthernet data, a combined ISDN and 10Base-T signal, into ISDN data for Voice Instrument 299 and 10Base-T LAN data for other equipment." Pet. Reply 11–12 (citing Ex. 1003, Fig. 2; Second Crayford Declaration ¶ 68[16]); Pet. 24–26. A person of ordinary skill "would understand that both ISDN and 10Base-T Ethernet data terminate at the Hunter ISTE." *See* Pet. Reply 11–12 (citing Second Crayford Decl. ¶ 68). A drawing made by Dr. Madisetti's during his deposition, Ex. 1034, "shows 'Ethernet terminal equipment' can include a remote module, a PC or Phone device, and associated connectors." *See id.* at 13 (citing Ex. 1034). We specifically find that "the power supplied to the ISTE in Hunter powers the Voice Instrument." *Id.* at 14 (quoting Ex. 1003, 38:25–27) ("[V]oice instrument 299 is . . . couplable to the equipment 260 and receives both data and power therefrom."); *see also* Second Crayford Decl. ¶ 71 (noting Hunter explains the Voice Instrument "remain[s] powered even when associated devices are not or in the event of a power failure" (quoting Ex. 1003, 37:15–18)); First Crayford Decl. ¶ 102 (the path delivering power continues "at least" to the ISTE, which continues to the Voice Instrument); Pet Reply 13 (citing First Crayford Dep., 84:6–9 ("everything to the right of [connector

[16] We have reviewed Patent Owner's Observations relating to the Second Crayford Deposition. None of the Observations concisely raise any issue about the credibility of Mr. Crayford's testimony. *See, e.g.*, Obs. 14. To the extent they are not directed to credibility, the Observations do not change our findings.

297 is] what we called the terminal equipment or data terminal equipment"); Pet. Fig. 1).

Patent Owner argues Hunter does not apply to Ethernet communications. PO Resp. 39–41. In support, Patent Owner cites to Hunter's disclosure that "[e]xcept for hub 170, all other hubs 140–180 (and the PC 125) are connected to the multimedia hub 120 through 'isoEthernet® network interfaces.'" *Id.* at 40 (citing Ex.1003, 34:28–35:2, *see also* 34:19–21, 35:14–16, 35:27–28, 36:13–17, Fig.1). According to Patent Owner, isoEthernet network interfaces only carry ISDN signals, not Ethernet signals. *Id.* (citing Ex. 1003, 15:15–18; Madisetti Decl. ¶ 76). Patent Owner also argues that hub 170 in Figure 1 of Hunter is connected to multimedia hub 120 through a 10Base-F interface. *Id.* (citing Ex. 1003, 36:20). According to Patent Owner, a 10Base-F interface requires a fiber connection, and "fiber cannot carry electrical current." *Id.* at 40–41 (citing Madisetti Decl. ¶ 78).

Patent Owner's argument is not persuasive. Patent Owner focuses on the embodiment shown in Figure 1 of Hunter. PO Resp. 39–41. Hunter, though, is not limited to that embodiment. Hunter teaches that preferably "the bus comprises a *10Base-T bus*," but notes that "[t]hose of skill in the art will recognize . . . that the present invention *is also compatible* with Ethernet®, Token Ring®, ATM and *isoEthernet*® standards." Ex. 1003, 21:17–21, 26:3–11 (emphasis added). Therefore, contrary to Patent Owner's argument, Hunter is *not* limited to an embodiment in which network equipment is connected by isoEthernet interfaces.

Even if limited to network equipment connected by isoEthernet interfaces, we are not persuaded that isoEthernet interfaces *only* carry ISDN signals, *not* Ethernet signals. PO Resp. 41 (citing Ex. 1003, 15:15–18;

Madisetti Decl. ¶ 76). The portion of Hunter cited by Patent Owner indicates that isoEthernet interfaces *can* carry ISDN signals, but does not establish that isoEthernet interfaces *only* carry ISDN signals. Ex. 1003, 15:15–18. Paragraph 76 of the Madisetti Declaration cited by Patent Owner states that "isoEthernet used ISDN signals, not Ethernet," but Dr. Madisetti provides no support for that statement other than citing the same portion of Hunter, "Transport Standards," discussed above. Madisetti Decl. ¶ 76. In contrast, the documentary evidence that Petitioner submitted with the Petition (Pet. iv (exhibit list); Pet. Reply 11) indicates that isoEthernet includes a 10Base-T mode in which the "IsoEthernet layer functions as a 10Base-T transceiver" (Ex. 1010, 165).[17] As a result, even if we accept Patent Owner's premise that hub 120 in Figure 1 of Hunter communicates with hubs 140, 150, 160, 180 using isoEthernet interfaces, the evidence of record indicates that isoEthernet interfaces carry 10Base-T signals at least when used in the 10Base-T mode of isoEthernet.

Patent Owner's argument regarding 10Base-T hub 170 in Figure 1 of Hunter also is not persuasive for an additional reason. As discussed above, Patent Owner alleges that 10Base-T hub 170 is connected to multimedia hub 120 *only* through a 10Base-F interface. PO Resp. 40 (citing Ex. 1003, 36:20). The evidence cited by Patent Owner, however, does not support that argument. The cited portion of Hunter states that "[t]he 10Base-T hub 170 *further provides* an Ethernet® AU interface and a single 10Base-F network interface." Ex. 1003, 34:18–20 (emphasis added). The phrase "further

[17] We cite to the page numbers that Petitioner added to Exhibit 1010. Also, like Hunter, Exhibit 1010 refers to the IEEE 802.9a standard for isoEthernet. Ex. 1003, 15:15–18; Ex. 1010, 160.

provides" in this portion of Hunter indicates that 10Base-T hub 170 *also* includes a 10Base-F interface, but does not establish that 10Base-T hub 170 *only* includes a 10Base-F interface. *Id.*

At the oral hearing, Patent Owner further argued that, although Hunter teaches a 10Base-T bus, Hunter does not teach that the 10Base-T bus carries *both* 10Base-T signals and DC power. Tr. 126:9–127:11. According to Patent Owner, when the 10Base-T bus carries DC power, it only carries ISDN signals. *Id.* at 128:22–129:3. Patent Owner reads Hunter too narrowly. For example, Hunter teaches the following:

> In the illustrated embodiment, the bus comprises a 10Base-T bus. *A l0Base-T bus conventionally comprises two twisted-pair conductors 240, 250, each used for unidirectional transmission of data.* Thus, in this embodiment, one of the twisted pairs (say, 250) is employed for transmitting data from the equipment 260, while the other of the twisted-pairs (say, 240) is used for receiving data into the equipment 260. *The present invention preferably employs each of the twisted-pair conductors as a rail by which to deliver DC power to the equipment 260*.

Ex. 1003, 37:19–28 (emphasis added). In other words, Hunter teaches *generally* that the 10Base-T bus can deliver DC power over the same two twisted pair conductors used to transmit data. *Id.* at 21:22–29, 37:19–28. We, therefore, do not read Hunter as teaching that the 10Base-T bus can only carry DC power with ISDN signals. Rather, as discussed above, Hunter indicates that isoEthernet and ISDN are just *alternatives* to a preferred embodiment that uses 10Base-T. Ex. 1003, 21:17–21 ("also compatible with . . . isoEthernet®"); *id.* at 26:3–11 ("also compatible with . . . isoEthernet®"); *id.* at 39:15–16 ("compatible with ISDN standards").

Patent Owner contends Petitioner has not shown that the terminal equipment is configured "to draw different magnitudes of DC current flow

via the at least one path . . . to convey information about" the recited equipment or device. PO Resp. 47–50. Patent Owner argues that Bulan's current "information" cannot be about the terminal equipment (TE) because Bulan is separate from the TE and cannot convey information about itself. *Id.* at 48–49 (citing Madisetti Decl. ¶¶ 110, 112; *id.* at 48, Petition Figure 3 (illustrating the combined Bulan and Hunter circuit)). Patent Owner contends that "Bulan describes a circuit in the hub – not the terminal equipment – that manipulates the voltage applied to a generic, unknown, terminal device if it contains a DC-DC converter." *Id.* at 49 (citing Madisetti Decl. ¶ 113.)

We are not persuaded that the Hunter and Bulan combination does not convey information about a terminal device as recited in independent claims 1 and 104. The claims only require "at least one of the magnitudes of the DC current flow to convey information about" the "Ethernet terminal equipment" or the "end device." In one Bulan example, the current drawn by the TE may exceed the static limit and dynamic limit. *See* Pet. 32. Information about the TE is conveyed which may be a permitted current surge required to initiate operation of the TE or the presence of an "unintended operational fault[]" which is suppressed by adding a high impedance to the path. *Id.* (citing Ex. 1004, col. 1, ll. 60–62, col. 1, ll. 28–29, Abstract, col. 3, ll. 5–6). Bulan's iterative process "as a whole conveys information about the electrical design and state of the TE." *Id.* at 33 (citing Ex. 1004, col. 7. ll. 7–14, Fig. 7).

We are not persuaded that Hunter shows interconnecting "hubs" and not Ethernet terminal devices. As discussed above we find that the recited "terminal equipment" or "end device" includes Integrated Services Terminal

Equipment (ISTE) card 260 and may also may include Voice Instrument 299 or other similar attached terminal devices envisioned by Hunter's system. We find that a person of ordinary skill would understand the hubs described in Hunter and the PC each connect to Multimedia Hub 120 (Ex. 1003, Fig. 1) "to a telephone and each have an ISTE Card to separate LAN data from voice data as shown in Figure 2." Pet. Reply 16 (citing Second Crayford Decl. ¶ 74). We find that a person of ordinary skill "would understand the hubs themselves could include power sources for phantom powering associated devices." *Id.* (citing Ex. 1003, 19:2–7).

4. Claim 104 and Dependent Claim 103

Petitioner contends that "[c]laims 1 and 104 recite identical language, except that claim 104 refers to a 'powered-off end device' instead of the 'piece of Ethernet terminal equipment' in claim 1." Pet. 41. Claim 103 depends from claim 1, among other claims, and recites the same "powered-off" limitation present in independent claim 104. *Id.* at 41–42. We address claims 103 and 104 immediately below.

Claim 103 depends from claim 1 and multiple other dependent claims, additionally reciting "wherein the piece of Ethernet of [sic] terminal equipment is a piece of powered-off Ethernet terminal equipment." Independent claim 104 is identical to claim 103, including claim 1 limitations, differing in that the device claimed is "a powered-off end device" instead of "powered-off Ethernet terminal equipment." We interpreted "powered off" to mean "without operating power." *See* Section II.A.4 above. Because of their similarity, Petitioner references its showing for claims 1 and 103 (discussed below) for its showing regarding claim 104. Pet. 41–42.

With respect to claim 103, Petitioner asserts Bulan regulates the initial inrush current needed to start the TE's DC-to-DC converter (DC-DC). Pet. 40 (citing Ex. 1004, col. 1, ll. 52–62, col. 7, l. 78, Fig. 7). Because the TE cannot draw operating power until the DC-DC has started, Petitioner asserts the TE is "powered-off," as we construed the term, throughout all of the iterations of the Bulan procedure previously described. *Id.*; *see also* First Crayford Decl. ¶¶ 134–138 (detailing Bulan's process). Petitioner further contends both Hunter and Bulan refer to the uses of DC-DC and it would have been obvious that the TE would require a DC-DC to "convert the phantom power supplied by the Hub into power suitable for operating the TE." Pet. 40 (citing Ex. 1003, 38:28–39:8; Ex. 1004, col. 1, ll. 52–56); *see also id.* at 41 (citing Ex. 1004, col. 1, ll. 57–62, col. 7, ll. 7–14, Fig. 7). Petitioner argues that only once the DC-DC has complete startup does the TE receive operating power and draw "normal operating current." *Id.* at 41 (citing Ex. 1004, col. 1, ll. 57–62, col. 2, l. 2, col. 6, l. 65–col. 7, l. 14, Fig. 7). Petitioner concludes "the TE is 'powered-off' throughout all of the iterations of the Bulan procedure." *Id.*

Patent Owner argues Petitioner has not shown that the claims meet the limitations that recite a "powered-off device," including claims 103 and 104. PO Resp. 56–57. According to Patent Owner, Petitioner's showing relies on Bulan for its teaching of "applying ***operating power*** to the DC-DC converter, ***which is part of the end device***: 'A typical TE includes a direct current to direct current (DC to DC[)] converter.'" *Id.* at 57 (citing Ex. 1004 col. 1, ll. 52–56). Patent Owner concludes that Bulan is continuously applying operating power to the DC-DC converter which is a piece of the

"Ethernet terminal equipment," and is not "powered off." *Id.* (citing Madisetti Decl. ¶ 141).

Patent Owner cites to an annotation of Bulan's Figure 7 (Response Figure 3) as supporting its position that Bulan's "control current apparatus" activates only when more than the normal operating current is applied to the device. PO Resp. 58 (citing Madisetti Decl. ¶ 143). Patent Owner concludes that even the DC-DC converter is part of the TE and even if the TE is otherwise not operating the claim limitation of "powered-off" is met because "at least via its DC-DC converter – [it] is drawing operating power, and therefore is not "powered-off" under the Board's claim construction." *Id.* at 59–60 (citing Madisetti Decl. ¶ 146; *see also* First Crayford Decl. ¶ 136 (citing Ex.1004, col. 1, ll. 52–56 ("A typical TE includes a . . . DC to DC converter")).

We construed "powered-off" to mean without operating power but that some power may be applied to the "remote module" and it may still be "powered-off." The TE cannot draw sufficient power "to operate/perform its functions until the DC-DC component has completed its startup," at the end of the iterative Bulan procedure. Pet. Reply 24 (citing Pet. 39–42, 11–13, 16–24, 28–30). We are not persuaded that when a component of a TE receives power that the TE has "operating power." *See* Second Crayford Decl. ¶ 97 (for example, a VCR does not receive "operating power" when a display is on). This conclusion follows from the Specification, which explains that as between the central module and the remote module attached to the equipment to be monitored, the remote module is always powered. Ex. 1001, col. 3, ll. 27–30, col. 5, ll. 39–58.

We find that Petitioner has shown that the TE is "powered-off" when the "remote module" described in the Specification receives operating power while the TE (i.e., PC) does not. *See* Pet. Reply 26–27. We are not persuaded by Patent Owner's argument that, when just the DC-DC converter receives power, the TE has operating power. We find that the "powered-off" limitation is shown by the combination of Hunter and Bulan and the TE may be "powered-off" even when the DC-DC converter has operating power.

5. Dependent Claims 5 and 31

Petitioner's showing on claims 5 and 31 is found at pages 33 through 35 of the Petition and paragraphs 119 through 123 of the First Crayford Declaration. Petitioner's stated reasons for modifying Hunter with respect to claim 1 also apply to *all* the dependent claims. *See* Pet. 10–15. Claims 5 and 31 both depend from claim 1. Each recites a further limitation on the "Ethernet terminal equipment" of claim 1.

Claim 5 requires "BaseT Ethernet communication signals." Petitioner relies on its showing for limitation [b] of claim 1 for "10Base-T" or "100Base-T" as its showing. Pet. 33; First Crayford Decl. ¶ 119 (referring to ¶ 101 on limitation 1 [b], "twisted-pair Ethernet (e.g., 10Base-T or 100Base-T) . . . two twisted pairs []are used to carry both power and Ethernet communication signals[].").

Patent Owner argues that Petitioner's reliance on Ethernet in general does not disclose the 10Base-T or 100Base-T standards. PO Resp. 54 (citing Pet. 26. We are persuaded that Hunter discloses both Ethernet® and "BaseT Ethernet communication signals" as recited in claim 5. Pet. Reply 11 (citing Pet. 24–26); *see also* Section II.C.3 above (Hunter discloses 10Base-T,

100Base-T4, and isoEthernet standards). We credit the First Crayford Declaration that regardless of the type of twisted-pair Ethernet, 10Base-T or 100Base-T, Hunter discloses Ethernet communications. First Crayford Decl. ¶ 100 (citing Ex. 1001, claim 3). We find Hunter shows the 10Base-T and 100Base-T recitations in claim 5 because 10Base-T and 100Base-T are twisted pairs, as Dr. Madisetti testifies. Madisetti Decl. ¶ 134. We construed 10Base-T and 100Base-T to mean "twisted pair Ethernet in accordance with the 10BASE-T or 100BASE-T standards." *See* Section II.A.3 above. Patent Owner does not contest that construction. *See* PO Resp. 18.

Claim 31 requires that the "DC current" recited in claim 1 is within "a predetermined range of magnitudes." Petitioner cites to Bulan examples, including that current will rise from zero to the "static limit" or above or, in another example, fall to the static limit to trickle level and finally to zero. *Id.* at 33–34 (citing Ex. 1004, col. 1, ll. 57–65, col. 3, ll. 3–25, col. 6, ll. 36–58, col. 7, ll. 3–4 ("falls to less than the static threshold"), col. 7, ll. 11–13: First Crayford Decl. ¶ 120).

6. Dependent Claims 43 and 111

Petitioner's showing on claims 43 and 111 is found at pages 35 through 36 and 42 of the Petition and paragraphs 124 and 140 of the First Crayford Declaration. Claim 43 depends from claim 1 and recites "wherein the information to distinguish the piece of Ethernet terminal equipment from at least one other piece of Ethernet terminal equipment." Petitioner relies, in part, on its showing with respect to limitation [g] of claim 1, which is similar

to claim 43.[18] *See* Pet. 35; Section II.C.3.a above. Claim 43 differs from limitation [g] of claim 1 in that the "information" must be capable of distinguishing between at least two different pieces of Ethernet terminal equipment. *See* n.19. Petitioner relies on Bulan's "procedure iterations as a whole distinguishes the TE from other TE's which would have a different pattern." Pet. 36 (citing Ex. 1004, col. 7, ll. 11–14 ("This may happen several times, as may be peculiar to the particular terminal equipment being connected to the line."); First Crayford Decl. ¶ 124). Claim 111 depends from claim 104 and recites the same subject matter as claim 43 for a "powered-off end device" instead of "Ethernet terminal equipment." Petitioner relies on its showing regarding claim 43 (see above). *Id.* at 42 (citing First Crayford Decl. ¶ 140).

Patent Owner argues that none of the Petitioners' arguments or supporting evidence show the "distinguish" limitation recited in claims 43, 111, and 103. PO Resp. 50–51 (citing Pet. 35–36). Patent Owner lists the four examples cited in the Petition: inrush current, trickle current, a decline in trickle current to zero, and Bulan's iterative procedure as a whole. *Id.* Patent Owner repeats the argument we addressed above regarding distinguishing information in general. *See* Section II.C.3 above. Specifically to the instant issue, Patent Owner argues "none of Petitioners' four examples distinguishes one Ethernet terminal/end device from another

[18] Limitation [g] of claim 1 recites "wherein at least one of the magnitudes of the DC current flow to convey information about *the piece* of Ethernet terminal equipment" instead of "*at least one other piece* of Ethernet terminal equipment" of claim 43. Emphasis added.

Ethernet terminal/end device." PO Resp. 51–52 (citing Madisetti Decl. ¶¶ 118, 119).

We find Petitioner has shown that, with respect to these apparatus claims, the Bulan circuit at least has the capability of distinguishing, and does distinguish, one piece of Ethernet equipment from another. *See Schreiber*, 128 F.3d at 1475–77. As discussed above in connection with claim 1, we are persuaded that Bulan's "procedure iterations as a whole distinguishes the TE from other TE's which would have a different pattern." Pet. 36 (quoting Ex. 1004, col. 7, ll. 11–14 ("This may happen several times, as *may be peculiar to the particular terminal equipment being connected to the line*.") (emphasis added); First Crayford Decl. ¶ 124). We find that "Hunter states that the Hub can include a protective device for each TE." Pet. Reply 20–21 (citing Ex. 1003, 42:21–23; Second Crayford Decl. ¶ 87). If an operational fault occurs, the Hub will cease providing power to the affected TE only. Pet. 21–24. We agree with Petitioner and find that "the Hub differentiates TEs from one another based on the detected magnitudes of current within the path for each TE." Pet. Reply 21 (citing Pet. 31–33, 35–36; 21–24; First Crayford Dep., 118:10– 119:18, 126:21–127:9).

7. Dependent Claim 70

Petitioner's showing on claim 70 is found at pages 36 through 37 of the Petition and paragraphs 125 through 128 of the First Crayford Declaration. Claim 70 depends from claim 1 and recites "current for a first interval followed by a second magnitude of DC current for a second interval, wherein the second magnitude is greater than the first magnitude." Relying on the First Crayford Declaration, Petitioner shows that "[t]here are several intervals in which the DC current would comprise a second magnitude that

is greater than the magnitude comprised in some previous interval." Pet. 36–37 (citing First Crayford Decl. ¶¶ 125–128); *see also id.* at 37 (citing Ex. 1004, col. 6, ll. 36–51, col. 6, ll. 53–58, col. 7, ll. 7–13) (switching a high impedance into a path and static and dynamic current limits).

8. Dependent Claims 72 and 123

Petitioner's showing on claims 72 and 123 is found at pages 38 and 42 of the Petition and paragraphs 129 and 141 of the First Crayford Declaration. Claim 72 depends from claim 1 and recites "wherein at least one magnitude of the DC current is part of a detection protocol." Petitioner argues "[t]he different magnitudes of DC current flow as relied on in Claim 1(e) and (g) are part of a detection protocol." Pet. 38 (First Crayford Decl. ¶ 129; *see* above regarding limitations [e] and [g] of claim 1). Relying on the cited First Crayford Declaration, Petitioner asserts the "detection protocol" of Bulan detects "whether the TE is experiencing an overcurrent condition, and to then further detect and distinguish between overcurrent conditions caused by a TE's DC-DC starting up and overcurrent conditions caused by unintended operational faults." *Id.* Petitioner concludes that Bulan removes the high impedance for startup but not for unintended faults and "this detection protocol is central to Bulan's purpose." *Id.*

Claim 123 depends from claim 104 and recites the same subject matter as claim 72 for a "powered-off end device" instead of "Ethernet terminal equipment." Petitioner relies on its showing regarding claim 72 (see above). *Id.* at 42 (citing First Crayford Decl. ¶ 141).

Patent Owner alleges the combination does not teach a "detection protocol" as required by claims 72 and 123. PO Resp. 56. Relying in part

on its proposed construction of "protocol," the TE does not communicate with the circuit of Bulan but only "detects information" about the TE. *Id.*

In Section II.A.5 we construed "detection protocol" to mean that the claimed magnitude of DC current must be capable of being part of a detection protocol, which may involve, but is not limited to, rules for making a discovery or a mutually agreed upon method of communication. Patent Owner's arguments about "detection protocol" as required by claims 72 and 123 are based on its position that a communication back and forth must occur. *See* PO Resp. 56. We are persuaded that the different magnitudes of DC current flow detected by the Bulan circuit fall within the scope of "a detection protocol" because the circuit detects the state of the TE. *See* Pet. 38 (citing Pet. 27–29, 31–32; First Crayford Decl. ¶ 129). In addition, or alternatively, the TE components that create the different magnitudes have the capability of being part of a protocol as recited in these apparatus claims. *See In re Schreiber*, 128 F.3d at 1475–77. We determine, as noted above, it is not necessary that there be bi-directional communication as Patent Owner proposes in its claim construction.

9. Dependent Claims 74 and 75

Petitioner's showing on claims 74 and 75 is found at page 38 through 39 of the Petition and paragraphs 130 through 131 of the First Crayford Declaration. Claim 74 depends from claim 1 and recites "wherein the at least one path comprises an electrical component." Petitioner relies on the current path through the Bulan's current control apparatus, which includes "various electrical components," such as resistors 40 and 48 in Figure 3. Pet. 38 (citing Ex. 1004, col. 4, ll. 49–50, col. 4, ll. 60–65, Figs. 2, 3; First Crayford Decl. ¶ 130). This showing is also cited by Petitioner for claim 75,

which depends from claim 74 and recites that the electrical component is a resistor. *Id.* at 39.

Patent Owner argues the "ISTE card" hub "Connector on ISTE" 297 of Hunter identified as the contacts for the path does not disclose a "resistor" in the path. PO Resp. 52, 53 (citing annotated Fig. 2 of Hunter; Pet. 26–27), 54 (citing Madisetti Decl. ¶¶ 131–132).

The claimed "at least one path" comprises an "electrical component" per claim 74 and the component is a resistor per claim 75. Patent Owner does not contest claim 74 but argues that the resistor of claim 75 is not in the recited path. Patent Owner argues the path is as shown in its Response. PO Resp. 53–54 (citing Madisetti Decl. ¶ 131). We find that the "at least one path" as proposed by Petitioner in the Hunter and Bulan combination is as shown in Petitioner Figure 3, which is shown and discussed at pages 14 through 15 of the Petition. *See* Pet. Reply 22 (reproducing Petition Figure 3). The path relied on by Petitioner shows a resistor 40 in the current sensor. *See* Pet. 38 (citing Bulan col. 4, ll. 49–50).

10. Dependent Claim 83

Petitioner's showing on claim 83 is found at page 39 of the Petition and paragraph 132 of the First Crayford Declaration. Claim 83 depends from claim 1 and recites "wherein the piece of Ethernet equipment comprises a controller." Petitioner argues that Ethernet terminal equipment commonly includes "a network controller to execute network protocol(s) needed by the device (*e.g.*, Ethernet, IP)." Pet. 39 (citing Ex. 1003, 10:12–14; First Crayford Decl. ¶ 132).

11. Dependent Claim 125

Petitioner's showing on claim 125 is found at page 42 of the Petition and paragraph 142 of the First Crayford Declaration. Claim 125 depends on claims 104 through 124 and recites "wherein the powered-off end device is a powered-off Ethernet end device." Petitioner challenges claim 125 to the extent it depends on claims 104, 111, and 123. Pet. 42 (heading n). Petitioner relies, among other things, its showing regarding claim 1's recitation of an "Ethernet terminal equipment." Pet. 42 (citing First Crayford Decl. ¶ 142).

12. Rationale for the Hunter and Bulan Combination

Petitioner advances several reasons to combine Hunter and Bulan, primarily based on their interrelated teaching. Pet. 10–14. Petitioner argues both Hunter and Bulan are directed to systems for phantom powering network terminal equipment. *Id.* at 10 (citing Ex. 1003, Abstract, 36:12–15, Fig. 2; Ex. 1004, col. 4:7–10, Fig. 1). Petitioner argues "Hunter and Bulan disclose similar terminal equipment that could be phantom powered, and similar levels of DC voltage." *Id.* at 10–11 (citing Ex. 1003, 23:19–21, 23:9; Ex. 1004, Abstract, col. 1, ll. 49–50; First Crayford Decl. ¶ 67).

Petitioner further argues "Bulan is intended to provide a superior replacement for the 'typical current limiting circuit' in such phantom powering systems, and Hunter employs just such a current limiting circuit: i.e., its 'protective device 213.'" Pet. 11 (citing Ex. 1004, col. 1, l. 65–col. 2, l. 14; Ex. 1003, 38:12–15). The current control circuit of Bulan would, according to Petitioner, replace Hunter's protective device 213. *Id.* (citing Ex. 1003, 38:15–19 (protective device protects from "overcurrents that may damage" the "power supply 210 and the bus"); First Crayford Decl. ¶ 68).

Petitioner notes that "Bulan criticizes the 'typical current limiting circuit' as 'inappropriate for operation throughout the whole current load regime'" because it fails to distinguish between operational faults and a normal power up event in a TE that contains a DC-DC. Pet. 11 (citing Ex. 1004, Abstract, col. 1, ll. 26–31, col. 1, l. 52–col. 2, 1; First Crayford Decl. ¶ 69). According to Petitioner, this is in part because the "typical current limiting circuit" either sets a current limit so low that startup cannot occur or so high that a fault will draw excessive current jeopardizing the operation of the power circuit. *Id.* at 11–12 (citing Ex. 1004, col. 1, l. 66–2:8; First Crayford Decl. ¶ 71). Petitioner argues "Hunter's protective device 213 suffers from the deficiency identified in Bulan." *Id.* at 12 (citing Ex. 1003, 38:12–19; First Crayford Decl. ¶ 71).

Based on the preceding, Petitioner argues replacement of the protective circuit of Hunter with Bulan's current control circuit would be a "particularly straightforward task" for the person of ordinary skill in the art who would have had "a more than reasonable expectation of success, since the Bulan appartus [sic] is intended to simply replace prior art current limiting circuits without further modification." Pet. 13 (citing Ex. 1004, col. 2, ll. 23–26; Ex. 1003, Fig. 2 (showing protective device 213); First Crayford Decl. ¶ 74). Petitioner argues both Hunter and Bulan "assume there is a separate protective device in the Hub to regulate the current to each separate TE, making the combination a simple one-for-one replacement." *Id.* at 13–14 (citing Ex. 1003, Fig. 2 ("protective device 213 in series to single remote 'ISTE'"); Ex. 1004, Fig. 1 ("each 'NT1' in Hub connected to a single remote TE device"), col. 4, ll. 17–25 ("'Each of the

NT1s includes a line interface circuit' that includes the current control apparatus of the invention.").

Petitioner concludes that "[i]n the combined system, Bulan's current control apparatus simply replaces the existing 'protective device 213' of Hunter, and DC current and power continue to flow through the phantom power circuit unchanged." Pet. 14. The combined system of Hunter and Bulan would be as shown in Petition Figure 3, reproduced above.

Patent Owner first contends that Petitioner does not show a sufficient rationale for a person of ordinary skill in the art to combine the references as Petitioner proposes. PO Resp. 18–31. Patent Owner's argument depends on the premise that the invention of the '107 patent is limited to equipment networked over pre-existing wiring or cables. *Id.* at 19 (citing Pet. 3; First Crayford Decl. ¶ 42 ("pre-existing wiring or cables that connect pieces of networked computer equipment to a network")). The specification and claims of the '107 patent, however, do not support that premise. The specification of the '107 patent states that "[t]his invention is *particularly adapted* to be used with an *existing* Ethernet communications link." Ex. 1001, 3:40–42. This portion of the '107 patent indicates that the system of the '107 patent, while particularly suited for use with an existing Ethernet network, is not limited to such a use. *Id.* We also note that Patent Owner does not direct us to specific evidence indicating that the system taught by the combination of Hunter and Bulan is limited to Ethernet equipment networked over pre-existing wiring or cables, let alone to billions of nodes. *See* PO Resp. 19–20.

Moreover, even if we accepted Patent Owner's premise, Patent Owner's argument still is not persuasive. Patent Owner first argues that, "at

the time of the invention, an ordinary artisan would not have had a reason to apply telephone-based phantom operating power to Ethernet terminal equipment."[19] PO Resp. 19 (heading A), *id.* at 19–21. In Section II.C.3 above, we find Hunter discloses Ethernet terminal equipment and Ethernet communications. Thus, we find this argument unpersuasive and we give little weight to the unsupported testimony in the Madisetti Declaration that Hunter is "a phone system (not an Ethernet system)." *See* PO Resp. 19 (citing Madisetti Decl. ¶ 43); 37 C.F.R. § 42.65(a) (failure to disclose "underlying data or facts . . . entitled to little or no weight.").

Patent Owner contends that "Petitioners' proposed telephone-based phantom-power combinations – unaltered, as proposed – in an existing Ethernet network would have burned out the existing Bob Smith terminations"[20] resulting in impaired and degraded propagation of Ethernet data. PO Resp. 20 (citing Madisetti Decl. ¶ 45; First Crayford Dep. 45:10–21). We find that the '107 patent does not describe or discuss BSTs or CMCs in the described network or in the claims. *See* Pet. Reply 2; *supra* n.21. We are not persuaded of the relevance of these terminations, which are a design issue and are not a part of the 10BASE-T standard issued by IEEE. Madisetti Dep., 142:20–143:12; Pet. Reply 2. Finally, we credit the Second Crayford Declaration and find that a person of ordinary skill would know how to design a circuit considering BSTs and CMCs without damage

[19] This argument and the next argument are asserted as to the combination of Hunter and Bulan and the combination of Bloch, Huizinga, and IEEE 802.3, which is discussed in section II.D below. *See* PO Resp. 19 (heading A).
[20] Network nodes have "Bob Smith terminations" (BST) in existing terminal equipment and common mode chokes (CMC). PO Resp. 19 (citing First Crayford Dep. 43:20–44:2, 45:6–8, 195:3–196:3; Madisetti Decl. ¶ 42).

to the circuitry as well as satisfying FCC emissions requirements without them. Second Crayford Decl. ¶¶ 22–26.

Patent Owner argues that "[w]hen an unused pair of contacts is available – as in Ethernet – an ordinary artisan would have supplied power over the unused pairs, not the data pairs as Petitioners assert." PO Resp. 22–31; *see* n.20 (argument applies to both grounds). Patent Owner argues that "[n]either Hunter nor Bloch teach how to supply phantom power and Ethernet data over the same wires to Ethernet terminal equipment without affecting the Ethernet data." PO Resp. 22 (citing Madisetti Decl. ¶ 49). Further, Hunter teaches a third wiring pair for power that does not carry data, making it easier to keep the two separate. *Id.* at 22 (citing Ex. 1003, col. 19, ll. 20–22; Madisetti Decl. ¶ 51; Pet. 47). Patent Owner argues a "motivating reason" to use wires other than data pairs is that using the data pairs will disrupt the data propagation. *Id.* at 23 (citing Crayford Dep. 138:16–139-11; Madisetti Decl. ¶ 50).

Patent Owner's argument is not persuasive. Hunter teaches a 10Base-T bus that includes only two twisted pairs of conductors, both of which are used to transmit data. Ex. 1003, 37:19–28. Thus, contrary to Patent Owner's argument, the 10Base-T bus in Hunter does not include any unused lines. *Id.* Further, Hunter teaches delivering DC power over the same lines of the 10Base-T bus used to transmit data (*see supra* Section II.C.1) because it "has the advantage of not requiring the installation of a dedicated power cable" (Ex. 1003, 17:13–26). Hunter even addresses Patent Owner's alleged concerns about interference by explaining that "a careful phantom power scheme must be implemented to avoid problems that may arise due to interactions between the power and the data." *Id.* Thus, although alternative

ways of providing operating power to Ethernet terminal equipment may have existed (PO Resp. 22–23), that does not detract from the express teachings of Hunter. *See In re Mouttet*, 686 F.3d 1322, 1334 (Fed. Cir. 2012) ("[J]ust because better alternatives exist in the prior art does not mean that an inferior combination is unapt for obviousness purposes."); *In re Fulton*, 391 F.3d 1195, 1200 (Fed. Cir. 2004).

Patent Owner then argues experts were skeptical that data pairs could be used to deliver operating power to terminal equipment "without disrupting the data propagation." PO Resp. 26 (citing Madisetti Decl. ¶ 56). Patent Owner cites to an IEEE 802.3 committee in January of 2000 which "concluded that the unused pairs should be used, not the data-carrying pairs." *Id.* at 26–27 (citing Madisetti Decl. ¶¶ 57–67; *see also* Exs. 2040–2046 (IEEE documents,[21] e.g., Ex. 2040, 2–3 (reasons to use "idle pair" for power)). In July of 2000, a Power over Ethernet (PoE) committee meeting of IEEE resulted in considering applying power over data lines. *Id.* at 28–29 (citing Ex. 2045, 1). At this meeting, two Cisco engineers shared their finding, after "250 hrs of investigation," that sending common mode power on the signal pairs was found technically feasible. *Id.* (citing Ex. 2046, 2).

That in 2000 the IEEE committee considered separating data and power as an Ethernet Standard does not address the converse that using the same wire for data and power would not work in an Ethernet network. PO Resp. 27 (citing Ex. 2041, 3). Further, although Patent Owner's evidence indicates that some IEEE committee members were in favor of adopting an Ethernet standard in which operating power was delivered over unused lines,

[21] Authenticated by Ex. 2048, Declaration of Clyde Camp. PO Resp. 27.

Petitioner identifies evidence indicating that other committee members were in favor of using phantom power as the Ethernet standard. Pet. Reply 6–7 (citing Second Crayford Decl. ¶¶ 36–44; Ex. 1037, 3 ("Current will be injected via the center taps using a Phantom Power method on the TX and RX pairs.")); *see also* Ex. 1040, 3 ("Power over signal pairs allows easier integration of discovery & power control circuitry onto the PHY."). In any event, as noted above, the fact that an alternative way of providing operating power to Ethernet terminal equipment existed and was considered for an IEEE standard does not detract from the express teachings of Hunter. *See In re Mouttet*, 686 F.3d at 1334; *In re Fulton*, 391 F.3d at 1200. Moreover, we note that, even if Patent Owner's evidence indicates some amount of skepticism, we determine that it does not outweigh the strong evidence of obviousness presented by Petitioner and discussed in this Decision. *See In re Cyclobenzaprine Hydrochloride Extended-Release Capsule Patent Litigation*, 676 F.3d 1063, 1079 (Fed. Cir. 2012).

Patent Owner further argues a person of ordinary skill would not have combined Hunter and Bulan because Hunter describes a "preferable" protection circuit and adding Bulan would raise undesirable issues of complexity. PO Resp. 41–45. Patent Owner argues the problem solved by the Bulan circuit was not a common problem. *Id.* at 42–43 (citing Ex. 2049,[22] col. 2, ll. 26–28; Madisetti Decl. ¶ 82). Hunter discloses a thermistor or polyfuse to protect both the power supply and the bus that includes conductors from overcurrents that may damage either one of them.

[22] Michael James Turner, U.S. Patent No. 5,995,392, issued November 30, 1999 ("Turner," Ex. 2049).

Ex.1003, 38:15–19. Because it already had a "preferred" protection circuit, Patent Owner argues there is no "evidence that Hunter had the 'problem' that the complex Bulan circuit allegedly solves." PO Resp. 42 (citing Madisetti Decl. ¶ 82), *id.* at 43 (citing Crayford Dep., 126:21–127:9 (24 circuits of Bulan for every Hunter hub)).

We agree with Petitioner that "Bulan is intended to provide a superior replacement for the 'typical current limiting circuit' in such phantom powering systems, and Hunter employs just such a current limiting circuit: i.e., its 'protective device 213.'" Pet. 11 (citing Ex. 1004, col. 1, l. 65–col. 2, l. 14; Ex. 1003, 38:12–15). Even assuming Bulan addresses a problem that was not common, a person of ordinary skill would have employed Bulan's current protection circuit in Hunter's circuit, replacing Hunter's simpler current limiting component, in order to provide similar protection while adding a beneficial mechanism to distinguish start-up currents from fault currents, as Bulan expressly teaches. Ex. 1004, Abstract, col. 2, ll. 1–14. Obviousness does not require using the simplest or best approach when a reference expressly teaches a reason why a person having ordinary skill would make the proposed combination.

13. Summary Hunter and Bulan

On this record and for the reasons stated in the Petition and summarized above, Petitioner's arguments and supporting evidence have shown by a preponderance of the evidence that claims 1, 5, 31, 43, 70, 72, 74, 75, 83, 103, 104, 111, 123, and 125 of the '107 patent would have been obvious over Hunter and Bulan.

D. Obviousness over Bloch, Huizinga,[23] and IEEE 802.3

Petitioner alleges claims 1, 5, 31, 43, 70, 72, 74, 75, 83, 103, 104, 111, 123, and 125 would have been obvious to the person of ordinary skill in the art over Bloch, Huizinga, and IEEE 802.3. Pet. 7, 42–66. Petitioner cites the Crayford Declaration in support of its positions. *See* Ex. 1002 ¶¶ 143–195. Based on Petitioner's arguments and supporting evidence, we find Petitioner has made its case by a preponderance of the evidence and adopt the Petitioner's reasoning and factual assertions as our factual findings as summarized and discussed below.

1. Bloch (Exhibit 1005)

Bloch is a communication system consisting of a control unit and a terminal unit connected by four conductors that form a communication channel between the two units. Ex. 1005, Abstract, col. 1, ll. 9–13, Fig. 1. A "phantom circuit arrangement" is disclosed which allows the control unit to supply power to the terminal unit "over the same four conductors" used

[23] Huizinga is not independently relied on in the challenge. *See* PO Resp. 31–32, n.8; *see also* Tr. 197:19–198:16 (Petitioner agrees, noting Bloch cites Huizinga, which further explains bi-directional communication). The Petition does rely on Huizinga in conjunction with claim 43. Pet. 60 ("Huizinga confirms this point"). Patent Owner does not argue the *de minimus* use of Huizinga as a basis for denial of the Petition and we decline to do so independently. Also, Petitioner may rely on the reference to support its view of the state of the art.

for the communication channel. *Id.* Figure 1 of Bloch is reproduced below.

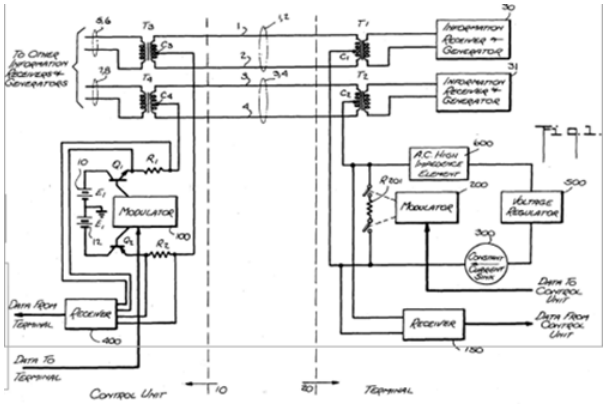

Figure 1 is a block diagram of the circuit arrangement of Bloch. Ex. 1005, col. 4, ll.7–13, col. 4, ll. 46–52. A terminal unit 20 is connected to control unit 10 with two conductor pairs, conductor pair 1 and 2 and conductor pair 3 and 4. *Id.* at col. 4, ll. 46–48. "Connected to both conductor pairs 1,2 and 3, 4 at each end is circuitry necessary to create a complete communication channel." *Id.* at col. 5, ll. 3–5. This circuitry includes two transformers at each unit, which are connected to information receivers and generators for receiving and generating voice signals, such as microphones and speakers. *Id.* at col. 5, ll. 5–11.

The control unit and terminal unit include circuitry for supplying power from a DC voltage source in the control unit to the terminal, and for bi-directional data signaling between the units over the same two pairs of conductors that form the communication channel. Ex. 1005, Abstract, col. 2, ll. 53–61, col. 5, ll. 20–30. In the phantom pair circuit arrangement "[a] d.c. voltage source is connected at the control unit to the phantom pair circuit arrangement." *Id.* at col. 3, ll. 17–19. "Power is supplied from the control unit 10 to the terminal 20 by applying d.c. current from the d.c. sources 10, 12 via the phantom circuit to terminal 20." *Id.* at col. 6, ll. 3–5.

The terminal unit may send various types of status data by modulating its internal impedance to fluctuate the terminal unit's current draw and transmit different magnitude current pulses to the control unit over the phantom circuit. Ex. 1005, col. 3, ll. 28–33, col. 5, l. 44–col. 6, l. 2. The current pulses, which are detected by a receiver in the control unit, may provide the control unit "information with respect to the status of different elements of terminal 20." *Id.* at col. 3, ll. 33–36, col. 5, l. 56–col. 6, l. 2. In response to the current pulses, the control unit may send data (in the form of voltage pulses) to control the terminal unit. *Id.* at col. 6, ll. 25–49, col. 11, ll. 1–5. The terminal unit receives this control data and applies it "to logic circuits in the terminal for controlling various circuits and equipment within the terminal." *Id.* at col. 5, ll. 35–38, col. 10, ll. 34–40.

2. Huizinga (Exhibit 1009)

Huizinga is an electronic key telephone station set having line selection buttons. Ex. 1009, Abstract. Data is exchanged over leads between a station set and an interface controller. *Id.* at col. 3, ll. 14–17. A common control network effects the exchange of data via a path established by a cross-connection network. *Id.* at col. 3, ll. 17–20. In response to receiving signals indicating actions taken by a user with respect to buttons, the interface controller may send data to the station to set "LED lamp actuation." *Id.* at col. 4, ll. 27–29.

3. IEEE 802.3 (Exhibits 1006, 1007, 1008)

"Ethernet" is syntax for "IEEE Std 802.3." Ex. 1008, 350. IEEE 802.3 teaches 10BASE-T Ethernet, which is the physical layer specification for 10Mb/s "LAN [local area network] over two pairs of twisted telephone wire." Ex. 1007, 23; *see also* Ex. 1006, 243 ("[t]he medium for 10BASE-T

is twisted pair wire.") (citations to exhibit pages). IEEE 802.3 discloses Ethernet "data terminal equipment (DTE)," which it describes as "[a]ny source or destination of data connected to the LAN (local area network)." Ex. 1008, 303 (Fig. 29–1, "information on building 100BASE-T networks."); Ex. 1006, 269 (describing 10BASE-T equipment); Ex. 1007, 7 (describing iterations of IEEE 802.3).

4. Claim 1

Petitioner alleges limitation [a][24] is taught by IEEE 802.3 which "discloses a piece of Ethernet terminal equipment, namely DTEs." Pet. 54 (citing Ex. 1007, 27 ("Data Terminal Equipment"), 303 (Figs. 29–1 and 29–2); Ex. 1006, 243 ("networks with . . . DTE"), 267 ("twisted-pair link connects a DTE to a repeater.").

Petitioner argues limitation [b] is met by the DTE of IEEE 802.3, which accepts twisted-pair conductors. Pet. 54–55 (citing Ex. 1006, 266, Figs. 14-20, 14-21; Ex. 1007, 147, Figs. 23–26, 23–27); *see also* Pet. 50 ("Petition Figure 7"). Petitioner further alleges "[i]n the combined system, the DTE would include the Ethernet MDI connector and the conductors (1, 2, 3, and 4) would connect to the transformers T1 and T2 through the connector's receive pair and transmit pair of contacts." *Id.* at 55 (citing Ex. 1005, Fig. 1; Ex. 1006, 266–67; Ex. 1007, 147; *see also* Ex. 1005, col. 2, ll. 30–47 ("audio communication channels over the four conductors"), col. 3, ll. 1–8) ("communication channels, typically audio channels"); First Crayford Decl. ¶ 170.

[24] As we did for the challenge based on Hunter and Bulan, we adopt Petitioner's convention of using [] in alphabetical order to represent the limitations of claim 1.

For limitation [c], Petitioner, at page 55 of the Petition, references an annotation of Figure 1 of Bloch as "Petition Fig. 6," which is reproduced below.

Petition Fig. 6

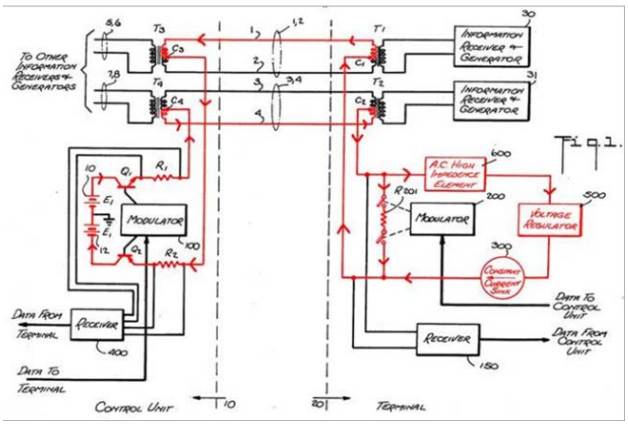

Petition Fig. 6 includes annotations in red added to Bloch Figure 1 reproduced above in Section II.D.1. Pet. 45. Petitioner argues "the DTE has a path coupled across the four contacts that connect the DTE to conductors 1, 2, 3, 4." *Id.* at 55–56 (citing Ex. 1005, col. 6, ll. 27–40 ("'Voltage sources 10 and 12' are 'connected in series so as to force current in the same direction, that is [in] from terminal center tap connection C3' through 'Q2 and then through voltage sources 12 and 10' to 'Q1' and then out 'the center tap connection C4'"); col. 5, ll. 20–27). Petitioner then alleges the path is for the purpose of drawing DC current from the control unit to the DTE via the conductors 1, 2, 3, 4. *Id.* at 56 (citing Ex. 1005, Fig. 1 (as annotated in Petition Fig. 6), col. 6, ll. 3–6; col. 9, ll. 6–22; First Crayford Decl. ¶ 171).

For limitation [d], Petitioner alleges that in Figure 1 of Bloch the center tap C1 of transformer T1 is coupled across the two contacts of one conductor pair (1, 2). Pet. 56. Then, according to Petitioner, the center tap

C1 of transformer T2 is coupled across the two contacts of the other conductor pair (3, 4). *Id.*

For limitation [e] Petitioner cites to Bloch's DTE which "draws different magnitudes of current flow via the path by switching resistor [R]201 in and out of the current path." Pet. 57 (citing Ex. 1005, col. 5, ll. 44–55, col. 9, ll. 6–22). Specifically, Petitioner notes Bloch's teaching of changing current supplied to the phantom circuit, which equals the current through resistor R201 connected across center-taps C1 and C2 (*see* Petition Fig. 6 above) or drops if the resistor is not in the circuit. *Id.* (citing Ex. 1005, col. 9, ll. 12–15, First Crayford Decl. ¶ 173).

Petitioner alleges that limitation [f], is met by Bloch's resistor R201 "coupled across center taps C1 and C2 of transformers T1 and T2, which connect to the first and second pair of contacts and conductors (1, 2, 3, 4)." *Id.* at 57–58 (citing First Crayford Decl. ¶ 175). Petitioner references its showing made above in connection with limitation [e], "Ethernet terminal equipment to draw different magnitudes of DC current flow" limitation. *Id.*

For limitation [g], Petitioner again cites to Bloch's teaching that by "switching resistor R201 in and out of the path, the current through the path is modulated and generates different magnitudes of DC current flow that are received by a Receiver 400 inside the control unit." Pet. 58 (citing Ex. 1005, col. 5, ll. 44–59, col. 9, ll. 2–15, col. 9, ll. 37–40). Petitioner argues the different current magnitudes "provide information with respect to the status of different elements of terminal 20." *Id.* (citing Ex. 1005, col. 5, l. 60–col. 6, l. 2, col. 11, ll. 1–4; First Crayford Decl. ¶ 176). One example identified by Petitioner is the "status of line keys (i.e., whether a line is in use)." *Id.* (citing Ex. 1005, col. 5, l. 64–col. 6, l. 2, col. 11, l. 1–4).

5. Claims 103 and 104

Following our construction of "powered-off," Petitioner cites Bloch's teaching that a DTE may be powered off when "the DTE sends hook switch current pulses when the DTE is hung up and not operational." Pet. 64–65 (citing Ex. 1005, col. 11, ll. 17–22 ("As illustrated in FIG. 7B, during each word, short width current pulses during time interval two, are transmitted from the telephone station set over the phantom circuit of conductors 1,2,3,4 to the key service unit, whenever the hook switch is open and the speaker phone is not operational."). Petitioner concludes that a person of ordinary skill in the art would have understood that "a device that is not operational does not draw the power it would draw when it is operational." *Id.* at 65 (citing First Crayford Decl. ¶ 191).

Patent Owner's sole argument regarding alleged limitations not disclosed in the Bloch, Huizinga, and IEEE 802.3 combination is that Petitioner has not shown sufficiently that the combination discloses the recited devices, "Ethernet terminal equipment" of claim 103 or "end device" of claims 104, 111, 123, and 125. Patent Owner argues "Petitioners rely on Bloch, exclusively, for these claim limitations." PO Resp. 60–61. Additionally, Patent Owner alleges "Bloch discloses a power arrangement that always supplies operating power to a connected terminal device." *Id.* (citing Ex. 1005, col. 3, ll. 17–23; Madisetti Decl. ¶ 144).

Regarding the power arrangement, Patent Owner notes that Petitioner's evidence is that Bloch Figure 7B shows short width current pulses are transmitted during a time interval over the phantom circuit of conductors to the "key service unit" whenever "*the hook switch is open and the speaker phone is not operational*." *Id.* at 62 (quoting from Pet. 64–65).

Patent Owner argues the preceding does not show that the "end device is configured 'to draw different magnitudes of DC current flow via the at least one path . . . to convey information about' itself, without operating power." *Id.* According to Patent Owner, just because "the speakerphone portion of a phone may not be operating to amplify sound does not mean that the voltage source is not applying operating power to the end device." *Id.* (citing Madisetti Decl. ¶ 151). Patent Owner asks rhetorically how a phone (the terminal device) rings without power. *Id.* at 63 (citing Madisetti Decl. ¶ 152 (phone rings only when hook switch is on and speakerphone is off), *see also id.* ¶ 153 (concluding Bloch's device has operating power).

We find that Bloch "teaches that the DTE draws different magnitudes of DC current flow (hook switch current pulses) via the at least one path . . . even when the DTE is in an 'on hook' state (i.e. 'powered off')." Pet. Reply 28 (citing Pet. 64–65, 55–57, 44–45 (Petition Figure 6), 47–48). We find that only the voltage regulator 500 component shown in Petition Figure 6 receives power in the "on-hook" state. *See* PO Resp. 61 (stating voltage regulator of Petition Figure 6 always has operating power). The terminal 20 (Petition Figure 6) includes other equipment. *See* Pet. 45 (illustrating Petition Figure 6). Dr. Madisetti testifies that the voltage source applies power at all times, even when the speakerphone portion is not operational. Madisetti Decl. ¶¶ 151–153. Thus, the DTE, the phone, otherwise is without operating power. We find the combination and specifically Bloch discloses "powered off" terminal equipment. *Id.* at 28–29 (citing PO Resp. 60–62; Second Crayford Decl. ¶¶ 102–103).

Dependent Claims 5 and 31

Petitioner's showing on claims 5 and 31 is found at pages 59 through 60 of the Petition and paragraphs 177 through 178 of the First Crayford Declaration. Petitioner's stated reasons for combining Bloch, Huizinga, and IEEE 802.3 with respect to claim 1 also apply to the dependent claims. *See* Pet. 52–54, *see infra* Section II.D.13. Claims 5 and 31 both depend from claim 1. Each recites a further limitation on the "Ethernet terminal equipment" of claim 1.

Claim 5 requires "BaseT communication signals." Petitioner relies on its showing for limitation [b] of claim 1 for "10Base-T" or "100Base-T" as its showing Ethernet communication signals. Pet. 59; First Crayford Decl. ¶ 177. In addition, IEEE 802.3 is cited for its teaching of "Ethernet communication signals would be BaseT Ethernet communication signals." *Id.* (citing Ex. 1006, 4 ("Specification for MAU types… 10BASET")).

Claim 31 requires that the "DC current" recited in claim 1 is within "a predetermined range of magnitudes." Petitioner cites to its showing regarding limitation [e]. Pet. 59. In addition, the predetermined current magnitudes in Bloch change when resistor R201 in Figure 7B is switched on or off in the path. *Id.* at 59–60 (citing Ex. 1005, col. 9, ll. 12–15, col. 10, ll. 56–65, Fig. 7B).

6. Dependent Claims Dependent Claims 43 and 111

Petitioner's showing on claims 43 and 111 is found at pages 60 through 61 and 65 of the Petition and paragraphs 179 through 180 and 193 of the First Crayford Declaration. Claim 43 depends from claim 1 and recites "the information to distinguish the piece of Ethernet terminal equipment from at least one other piece of Ethernet terminal equipment."

Petitioner relies, in part, on its showing with respect to limitation [g] of claim 1, which is similar to claim 43. *See* Pet. 60; Section II.D.4 above. Claim 43 differs from limitation [g] of claim 1 in that the "information" distinguishes between at least two different pieces of Ethernet terminal equipment. Petitioner relies, in part, on Bloch's teaching that the "current pulses generated by the DTE 'provide information with respect to the status of different elements of terminal 20' including the status of different line keys." Ex. 1005, col. 5, ll. 61–68; First Crayford Decl. ¶ 179). Claim 111 depends from claim 104 and recites the same subject matter as claim 43 for a "powered-off end device" instead of "Ethernet terminal equipment." Petitioner relies on its showing regarding claim 43 (see above). *Id.* at 65 (citing First Crayford Decl. ¶ 193).

7. Dependent Claim 70

Petitioner's showing on claim 70 is found at pages 61 through 62 of the Petition and paragraphs 181 through 183 of the First Crayford Declaration. Claim 70 depends from claim 1 and recites "wherein the DC current to comprise first magnitude of DC current for a first interval followed by a second magnitude of DC current for a second interval, wherein the second magnitude is greater than the first magnitude." Petitioner cites its disclosure regarding limitation [e]. Pet. 61; *see* Section II.D.4. Petitioner argues Figure 7B of Bloch "illustrates an example in which the DTE draws a magnitude of current indicating a 'zero' pulse during the third interval (TI-3) of Word 1, and a 'one' pulse during the fourth interval (T1-4) of Word 1." *Id.* "[T]herefore, the second magnitude of DC current during interval TI-4 is greater than the magnitude in the preceding interval TI-3." *Id.* at 62 (citing First Crayford Decl. ¶ 182).

8. Dependent Claims 72 and 123

Petitioner's showing on claims 72 and 123 is found at pages 62 through 63 and 66 of the Petition and paragraphs 184 and 194 of the First Crayford Declaration. Claim 72 depends from claim 1 and recites "wherein at least one magnitude of the DC current is part of a detection protocol." Petitioner argues Bloch teaches the limitation by "switching the resistor R201 in and out of the path, the current through the path is modulated and generates current pulses that are received by a Receiver 400 inside the control unit." Pet. 62 (citing Ex. 1005, col. 5, ll. 44–57, col. 9, ll. 6–22; First Crayford Decl. ¶ 184). Claim 123 depends from claim 104 and recites the same subject matter as claim 72 for a "powered-off end device" instead of "Ethernet terminal equipment." Petitioner relies on its showing regarding claim 72 (see above). *Id.* at 66 (citing First Crayford Decl. ¶ 194).

9. Dependent Claims 74 and 75

Petitioner's showing on claims 74 and 75 is found at page 63 of the Petition and paragraphs 185 through 186 of the First Crayford Declaration. Claim 74 depends from claim 1 and recites "wherein the at least one path comprises an electrical component." Petitioner relies on its showing regarding limitation [e] of claim 1. Pet. 63 (citing Ex. 1005, Fig. 1; Petition Figure 6); First Crayford Decl. ¶ 185). This showing is also cited by Petitioner for claim 75, which depends from claim 74 and recites that the electrical component is a resistor. *Id.* (citing First Crayford Decl. ¶ 186).

10. Dependent Claim 83

Petitioner's showing on claim 83 is found at pages 63 through 64 of the Petition and paragraph 187 through 189 of the First Crayford Declaration. Claim 83 depends from claim 1 and recites "wherein the piece

of Ethernet equipment comprises a controller." Petitioner argues that "IEEE-95 teaches that DTEs include hardware and software." Pet. 63 (citing Ex. 1007, 19). Furthermore, a person of ordinary skill "would understand that a controller, for example a processor, is necessary to run software and to operate over Ethernet." *Id.* at 63–64 (citing First Crayford Decl. ¶ 188).

11. Dependent Claim 125

Petitioner's showing on claim 125 is found at page 66 of the Petition and paragraph 195 of the First Crayford Declaration. Claim 125 depends on claims 104 through 124 and recites "wherein the powered-off end device is a powered-off Ethernet end device." Petitioner challenges claim 125 to the extent it depends on claims 104, 111, and 123. Pet. 66 (heading n.). Petitioner relies, among other things, on its showing regarding claim 1's recitation of an "Ethernet terminal equipment." Pet. 66 (citing Ex. 1007, 27 (DTE would be an Ethernet end device); First Crayford Decl. ¶ 195).

*12. Rationale for Combining Bloch, Huizinga, and IEEE 802.*3

We have reviewed Petitioner's argument and evidence that a person of ordinary skill in the art would have been motivated to combine Bloch and Huizinga and Bloch and IEEE 802.3. Pet. 52–54. We adopt Petitioner's arguments and rationale for the combination and are persuaded that Petitioner has shown a person of ordinary skill would have been motivated to combine the references.

Among other reasons, Petitioner points out that Bloch on its face references Huizinga. *Id.* at 52; *see* Ex. 1005 (56). Further, "[b]oth references are directed to key telephone systems and bi-directional signaling between station sets and controllers." Pet. 52 (citing Ex. 1005, Abstract; Ex. 1006, Abstract). Petitioner also argues that the benefit of combining

Bloch with IEEE 802.3 was more than just providing bi-directional signaling of status and control information over Ethernet cables; the benefit was doing so *without* using any bandwidth from the Ethernet communication channel. *Id.* at 53 (citing First Crayford Decl. ¶ 167 ("At the time of the invention, conserving bandwidth was a known consideration and design motivation in the prior art.")).

Patent Owner first contends that Petitioner does not show a sufficient rationale for a person of ordinary skill in the art to combine Bloch, Huizinga, and IEEE 802.3 as Petitioner proposes. PO Resp. 18–31. To the extent the arguments were made for both combinations, we refer to Section II.C.12 above.

Further, as also discussed in Section II.C.12, we disagree with Patent Owner's premise that the invention of the '107 patent is limited to a pre-existing Ethernet network (*see* PO Resp. 20) which is not supported by the specification or claims of the '107 patent. Thus, we see no reason why a person of ordinary skill in the art would have been dissuaded from combining the cited teachings of Bloch, IEEE 802.3-1993, and IEEE 802.3-1995 based on potential issues with a pre-existing Ethernet network. Moreover, even if we accepted Patent Owner's premise, Patent Owner's argument still is not persuasive because not all pre-existing Ethernet networks included Bob Smith terminations or common mode chokes. *See* PO Resp. 20; Section II.C.12 above.

Specific to the Bloch, Huizinga, and IEEE 802.3 combination, Patent Owner first argues that Bloch's unaltered circuitry is used in telephone systems and the Petition fails to show why a person of ordinary skill would combine a telephone system to Ethernet, as disclosed in IEEE 802.3. PO

Resp. 20 (citing Madisetti Decl. ¶ 44; *see also* First Crayford Dep. 173:10–19 (Bloch does not disclose Ethernet terminal equipment). That Bloch does not disclose Ethernet communications alone is insufficient to persuade us that a person of ordinary skill would not combine Bloch with IEEE 802.3, which does disclose 10BASE-T and 100BASE-T networks in the context of Ethernet communications. *See, e.g.*, Ex. 1008, 303 (Fig. 29–1, "information on building 100BASE-T networks."); Ex. 1006, 269 (describing 10BASE-T equipment); Ex. 1007, 7 (describing iterations of IEEE 802.3). We find that Bloch is not limited to a telephone system but also includes "many different control unit/terminal applications." Pet. 53 (citing Ex. 1005, col. 4, ll. 49–52).

Patent Owner argues that a person of ordinary skill in the art would have provided operating power to Ethernet terminal equipment over the unused lines in an Ethernet connection to avoid interference with the data signals. PO Resp. 22. In particular, Patent Owner points out that the Ethernet connector taught by IEEE 802.3-1993 and IEEE 802.3-1995 includes two unused pairs of conductors. *Id.* at 24 (citing Ex. 1006, 266–267; Ex. 1007, 147).

We are not persuaded by Patent Owner's argument. We credit the First Crayford Declaration testimony that a person of ordinary skill in the art "would understand that Bloch's phantom power circuit could be used in a 10BASE-T (or 100Base-T) Ethernet network with the Ethernet control and terminal units connected over [the] same twisted pairs of telephone wire used in the telephone system discussed by Bloch." First Crayford Decl. ¶ 167. Thus, a person of ordinary skill in the art would have possessed the background knowledge that phantom power also would work in an Ethernet

network. *See Randall Mfg. v. Rea*, 733 F.3d 1355, 1362–63 (Fed. Cir. 2013). In addition, at least two patents identified on the face of the ’107 patent (Ex. 1001 (56)), namely U.S. Patent No. 5,994,998 (“Fisher ’998,” Ex. 1025) and U.S. Patent No. 6,140,911 (“Fisher ’911,” Ex. 1026) (collectively, “the Fisher patents”), teach providing phantom power to Ethernet terminal equipment. Pet. Reply 4–5.

Patent Owner argues that members of an IEEE committee were skeptical that phantom power would work in an Ethernet network. PO Resp. 26–31. This argument was made as to both challenges and is discussed above in connection with the Hunter and Bulan challenge. *See supra* Section II.C.12. No skepticism argument is made specifically to the Bloch, Huizinga, and IEEE 802.3 challenge.

Patent Owner also contends that Petitioner has not shown that Bloch could be modified to eliminate interference. PO Resp. 32 (citing First Crayford Dep. 173:10–13). Additionally, Patent Owner asserts that if operating power is applied to the center taps of TE terminal, as would occur with Bloch’s design (*see* Pet. 45, Petition Figure 6), it “would saturate the coils and degrade the propagation of Ethernet data.” *Id.* (citing First Crayford Dep. 168:6–14; *see also* Madisetti Decl. ¶ 87 (Ethernet device higher power requirements over telephone systems would make the problem greater). Patent Owner suggests a design change to Bloch, current flow on both sides of the center tap, would not resolve the problem due to “imbalances in the wires.” *Id.* at 33 (citing Madisetti Decl. ¶ 88; First Crayford Dep. 169:14–15).

We are not persuaded that issues of noise, degradation of Ethernet data propagation, and reduced bandwidth interference would preclude one of

ordinary skill from making the Bloch combination. Patent Owner argues that Petitioner has not shown that Bloch could be modified to eliminate interference. Petitioner responds with evidence that a person of ordinary skill would use filters to segregate higher Ethernet frequencies from lower Bloch frequencies. Pet. Reply 7–8 (citing Ex. 1043,[25] col. 8, ll. 39–42; col. 10, ll. 25–27; Madisetti Dep., 205:11–206:5 (filter would prevent noise from interfering with Ethernet communications); Second Crayford Decl. ¶ 49). Dr. Madisetti's cited testimony is that "the R201 creates a square wave in the context of Bloch that would interfere with Ethernet communications. If there's a filter, it won't." Madisetti Dep. 205:21–206:9. Further, contrary to Patent Owner's argument regarding saturation, Petitioner does not propose applying operating power to just one side of the transformers in Bloch. First Crayford Dep., 167:14–169:22. Also, Mr. Crayford explained that the objective of balancing the coils on either side of the transformer to avoid saturation is "very well known." *Id.* at 169:14–22.

13. Summary

On this record and for the reasons stated in the Petition and summarized above, Petitioner's arguments and supporting evidence have shown by a preponderance of the evidence that claims 1, 5, 31, 43, 70, 72, 74, 75, 83, 103, 104, 111, 123, and 125 of the '107 patent would have been obvious over Bloch, Huizinga, and IEEE 802.3.

E. Petitioner's Motion to Exclude

Petitioner's move to exclude: (1) the Madisetti Declaration (Ex. 2038); (2) Exs. 2040–2046 ("IEEE Exhibits"); (3) the declaration of Clyde

[25] John F. Austermann, III et al., U.S. Patent No. 8,155,012, filed September 26, 2008, issued April 10, 2012 ("Austermann," Ex. 1043).

Camp ("Camp Decl.," Ex. 2048); (4) Exhibit 2047; (5) Exhibit 2049; and (6) Exhibits 2050 and 2054, and related testimony from the Second Crayford Deposition. Pet. Mot. Excl. 1. Patent Owner opposed the Petitioner's Motion to Exclude (Paper 50) and Petitioner filed a Reply (Paper 58).

1. Madisetti Declaration (Ex. 2038)

Petitioner argues the Madisetti Declaration should be excluded as unreliable "under F.R.E. 702, 703, 37 C.F.R. § 42.65 and the standards in *Daubert v. Merrell Dow Pharm., Inc.*, 509 U.S. 579 (1993) and *Kumho Tire Co. v. Carmichael*, 526 U.S. 137 (1999)." Pet. Mot. Excl. 1. Petitioner's basis for exclusion is that the Madisetti Declaration is based on a "1997" date of invention of the '107 patent when the earliest filing date on the face of the patent is April 10, 1998. *Id.* at 2. Petitioner alleges this is not inconsequential because, *inter alia*, "[b]ased on this error, he opines that 'Power over Ethernet ('PoE') did not exist in 1997.'" *Id.* at 3 (citing Madisetti Declaration ¶¶ 90, 155, 189, 232; *see also id.*, ¶¶ 37, 56, 67, 88, 93, 157, 191).

Patent Owner argues Petitioner's objection was untimely because it did not specifically mention the date of invention argument now asserted. Paper 50, 2 (citing Paper 27, 1–2). Patent Owner does not concede that 1997 is not the date of invention only that it did not need to prove the date because the references relied on all predated 1997.[26] *Id.* at 3. Petitioner argues in response that its factual assertions are unrebutted (Paper 58, 1–3) and the objection made gave sufficient notice (Paper 58, 3–5).

[26] Patent Owner mistakenly references the prior art at issue as being "the De Nicolo patents." Opp. Pet. Mot. Excl. 3. Regardless, all the references relied on here predate 1997. *See* Section I.D. above.

We agree with Patent Owner that the basis for the opinion of Dr. Madisetti goes to the weight afforded it. *See* Paper 50, 1 (citing *Liberty Mutual Ins. Co. v. Progressive Cas. Ins. Co.*, CBM2012-00002, Paper 66 at 60 (PTAB Jan. 23, 2014)). The testimony provided by Dr. Madisetti was weighed in the context of the unproven 1997 date of invention he testifies to. *See, e.g.*, Paper 50, 2–4. Petitioner's additional arguments regarding the Madisetti Declaration (Pet. Mot. Excl. 4–11) similarly go the weight to be afforded to it.

Because we overrule the objections to the Madisetti Declaration, we deny Petitioner's Motion to Exclude it.

2. IEEE Exhibits (Exs. 2040–2046)

Petitioner move to exclude Exhibits 2040–2046 ("IEEE Exhibits") and related testimony in the Madisetti Declaration as "irrelevant, unauthenticated, hearsay, and prejudicial." Pet. Mot. Excl. 11–12 (citing Paper 27, 1–5; F.R.E. 901, 801, 802, 804, 401, 402, 403).

We overrule the relevance objection. According to Patent Owner's theory, the IEEE Exhibits evidence skepticism that PoE using data wires was questioned, continuing to a time well after the date of invention. Paper 50, 13; *see also* PO Resp. 26–31 (arguing skepticism regarding PoE on data lines). We disagree with Petitioner that the IEEE Exhibits are irrelevant because Patent Owner has not "met its burden to show a nexus between these exhibits and the claims of the '107 Patent." Paper 58, 5. Petitioner's argument that Patent Owner has not shown a nexus is an issue of sufficiency of proof, not relevance. Because we determine the IEEE Exhibits are relevant, we also deny the objection based on prejudice.

We overrule the authentication objection. We determine that the testimony of authentication is sufficient. Petitioner cites only to the Camp declaration (Ex. 2048) as the only authenticating evidence. Mr. Camp does testify to familiarity "with the record-keeping system and policies used by IEEE 802 LAN/MAN Standards Committee including 802.3af." Paper 50, 11 (citing Ex. 2048 ¶ 1). Patent Owner cites to additional authenticating evidence. The documents are linked at the IEEE website and the Johnson Declaration (Ex. 2054) is cited to establish that "the documents were indexed and captured by the Internet Archive about the time they were created." *Id.* at 11–12; *see also* Ex. 2054 ¶¶ 3–13, attached Exs. A–G (corresponding to Exs. 2040–2046).

We overrule the hearsay objection. We agree with Patent Owner that the IEEE Exhibits are not hearsay because they are not offered for the truth of the matter asserted. Paper 50, 12. Rather they are offered as proof of skepticism, the state of mind of a person of ordinary skill. *See* Fed. R. Evid. 803 (3) (a statement is excluded from hearsay if made regarding the declarant's "state of mind (such as motive, intent, or plan). . .").

Because we overrule the objections to the IEEE Exhibits, we deny Petitioner's Motion to Exclude them and Dr. Madisetti's testimony relating to them.

3. "What is the Internet?" (Ex. 2047)

Petitioner argues that a website printout, "What is the Internet?" (Ex. 2047) is unauthenticated, irrelevant, and hearsay. Pet. Mot. Excl. 13–14. We overrule the relevancy objection. The meaning of "protocol" is an issue in the case. *See* section II.A.5 above.

Dr. Madisetti testified that he found and relied on Ex. 2047 in giving his expert opinions. Paper 50, 14 (citing Madisetti Decl. ¶ 104). Petitioner has provided no evidence that Exhibit 2047 is not what it purports to be and Dr. Madisetti has testified as to what it is. The authentication objection is overruled.

We also agree that Exhibit 2047 is not hearsay because it is not offered for the truth of the matter asserted. Paper 50, 14; *see also* F.R.E. 801(c)(2) (not hearsay if not offered for truth of matter asserted). A definition is not an assertion of truth. Even if Exhibit 2047 were inadmissible, Dr. Madisetti's opinion based on it is admitted. *See* F.R.E. 703.

Because we overrule the objections to the Exhibit 2047, we deny Petitioner's Motion to Exclude it and Dr. Madisetti's testimony relating to it.

4. Turner Patent (Ex. 2049)

Petitioner argues that Turner (Ex. 2049) is irrelevant, prejudicial, and confuses the issues. Pet. Mot. Excl. 14–15. If evidence is relevant, it may be excluded if its relevance is outweighed by its prejudice or it confuses the issues. *See* F.R.E. 403.

The relevance test requires only that "(a) it has any tendency to make a fact more or less probable than it would be without the evidence; and (b) the fact is of consequence in determining the action." Fed. R. Evid. 401. We agree with Patent Owner that the evidence has a tendency to support its claim that a person of ordinary skill would not have reason to combine Hunter and Bulan because Turner is about "thermistors that could protect circuits without interfering with normal device power-up." Paper 50, 14–15. We also agree with Patent Owner that Turner's relevance is not outweighed

by any prejudice or confusion of issues that we are not capable of weighing and deciding. *Id.* at 15.

Because we overrule the objections to the Exhibit 2049, we *deny* Petitioner's Motion to Exclude it and Dr. Madisetti's testimony relating to it.

5. IEEE Standards for Local & Metropolitan Area Networks/ EIA/TIA Bulletin (Exs. 2050 and 2054)

Petitioner argues that *IEEE Standards for Local & Metropolitan Area Networks* (Ex. 2050) and *EIA/TIA Bulletin* (Ex. 2054), referenced in the Second Crayford Deposition, are irrelevant and untimely. Pet. Mot. Excl. 15. Patent Owner filed Observations with respect to that deposition and Petitioner filed an Opposition. Papers 44, 55. Exhibits 2050 and 2054 were read into the record made at the Crayford Second deposition (Ex. 2055). *See* Opp. Obs., 3, 15.

We determine that Exhibits 2050 and 2054 are proper cross-examination as used in Second Crayford Deposition. However, neither exhibit was authenticated by Mr. Crayford nor did he have any familiarity with them. Second Crayford Dep., 35:18–36:5 (Ex. 2050); *id.* at 171:20–172:17 (Ex. 2054). The Exhibits are not otherwise admissible. Paper 50, 15. We therefore overrule the relevance objection.

Because Exhibits 2050 and 2054 are not offered as evidence separate from the cross-examination of Mr. Crayford and are otherwise inadmissible for reasons not alleged by Petitioner, we *deny* Petitioner's Motion to Exclude Exhibits 2050 and 2054 and decline to exclude any related testimony of Mr. Crayford.

F. Patent Owner's Motion to Exclude

Patent Owner moves to exclude what it alleges is new evidence presented in the Petitioner's Reply. PO Mot. Excl. 1–9. Patent Owner also moves to exclude Exhibits 1021–1029, 1031, and 1035 as inadmissible hearsay. *Id.* at 9–12. Petitioner opposed the Patent Owner's Motion to Exclude (Paper 52) and Patent Owner filed a Reply (Paper 57).

1. Exhibit 1020 and Other Listed Exhibits

Exhibits 1020 is the transcript of the deposition of Patent Owner's declarant, Dr. Madisetti. Other than pointing out that Exhibit 1020 was filed with and cited in Petitioner's Reply, Patent Owner does not provide any specific reason why Exhibit 1020, or any other exhibit listed in the table but not otherwise objected to, should be excluded. PO Mot. Excl. 1–9. We find in Section II.G that these exhibits are properly raised in Petitioner's Reply. Therefore, Patent Owner's Motion to Exclude is *denied* with respect to Exhibit 1020 and any other exhibit listed in the table at page 3 but not specifically objected to or argued.

2. Exhibits 1023–1024 and 1043

Exhibits 1021–1024 are product datasheets, catalogs, and specifications, and Exhibit 1043 is Austermann, which is related to the '107 patent and also is owned by Patent Owner. Patent Owner argues that Exhibits 1021–1024 and 1043 should be excluded as improper new evidence for the same reasons set forth in the Motion to Strike. PO Mot. Excl. 4–5; PO Mot. Str. 3–5. We do not cite to Exhibits 1021 and 1022. In general, Patent Owner's arguments are not persuasive for the same reasons discussed below with respect to the Motion to Strike. *See infra* Section II.G.2.

Patent Owner argues specifically that Exhibits 1023–1024 should be excluded as impermissible hearsay. PO Mot. Excl. 9. We rely on Exhibits 1023–1024 and 1043 in this Decision only to the extent they provide a basis for certain portions of the Second Crayford Declaration that are cited in this Decision. *See supra* Section II.C.12 (citing Second Crayford Decl. ¶¶ 22–26 (citing Exs. 1023–1024, 1043)). Patent Owner does not dispute that Exhibits 1023–1024 present the kinds of facts and data that Mr. Crayford would reasonably rely upon in forming an opinion. *See* PO Mot. Excl. 9–10; PO Reply Excl. 2–3. As a result, Exhibits 1023–1024 do not need to be independently admissible. *See* Fed. R. Evid. 703; *Power Integrations, Inc. v. Fairchild Semiconductor Int'l, Inc.*, 711 F.3d 1348, 1373 (Fed. Cir. 2013). Therefore, Patent Owner's Motion to Exclude is *denied* with respect to Exhibits 1023–1024 and 1043 and *denied as moot* with respect to Exhibits 1021 and 1022.

3. Exhibits 1025 and 1026

Exhibits 1025 and 1026 are the Fisher patents. Patent Owner argues that Exhibits 1025 and 1026 should be excluded as improper new evidence for the same reasons set forth in the Motion to Strike. PO Mot. Excl. 3; PO Mot. Str. 5. Patent Owner's arguments are not persuasive for the same reasons discussed below with respect to the Motion to Strike. *See infra* Section II.G.3.

Patent Owner also argues that Exhibits 1025 and 1026 should be excluded as impermissible hearsay. PO Mot. Excl. 9–12. Hearsay is limited to a statement that a party offers in evidence to prove the truth of the matter asserted in the statement. Fed. R. Evid. 801. Petitioner offers, and we rely on, the statements in Exhibits 1025 and 1026 as evidence of the effect those

statements would have had on a person of ordinary skill in the art, not for the truth of the matter asserted. *See supra* Section II.D.13 (citing Pet. Reply 4–5; Exs. 1025, 1026). As a result, Exhibits 1025 and 1026 are not hearsay. However, even if the statements in Exhibits 1025 and 1026 are hearsay, Exhibits 1025 and 1026 are admissible at least under Fed. R. Evid. 803(8). Specifically, Exhibits 1025 and 1026 are records of the activities of the U.S. Patent and Trademark Office, and Patent Owner has not shown that the source of information or circumstances lack trustworthiness. *See* PO Mot. Excl. 9–12; PO Reply Excl. 3; Fed. R. Evid. 803(8); *Fresenius Med. Care Holdings, Inc. v. Baxter Int'l, Inc.*, No. C 03-1431, 2006 WL 1330003, at *2–4 (N.D. Cal. May 15, 2006). Therefore, Patent Owner's Motion to Exclude is *denied* with respect to Exhibits 1025 and 1026.

4. Exhibit 1034

Exhibit 1034 is a drawing made by Dr. Madisetti at his deposition. Patent Owner argues the drawing was drawn "under duress" and is beyond the scope of cross-examination. PO Mot. Excl. 9. We overrule Patent Owner's objection to the extent it asserts "duress" because "duress" is not a proper objection. We also overrule the objection that the drawing is beyond the scope of cross-examination. Whether or not an "Ethernet terminal equipment" can include intermediate devices, like a remote module depicted in Exhibit 1034, which receives operating power, while the "Ethernet terminal equipment" does not, is an issue in this case. *See* Pet. Reply 25–27 (discussing Madisetti Deposition and Ex. 1034). Therefore, Patent Owner's Motion to Exclude is *denied* with respect to Exhibit 1034.

5. Exhibits 1036–1042

Exhibits 1036–1042 are documents relating to meetings of an IEEE committee. Patent Owner argues that Exhibits 1036–1042 should be excluded as improper new evidence for the same reasons set forth in the Motion to Strike. PO Mot. Excl. 5–6; PO Mot. Str. 5–6. Patent Owner's arguments are not persuasive for the same reasons discussed below with respect to the Motion to Strike. *See infra* Section II.G.4. Therefore, Patent Owner's Motion to Exclude is *denied* with respect to Exhibits 1036–1042.

6. Exhibits 1021–1022, 1027–1031, and 1035

We do not rely on Exhibits 1021–1022, 1027–1031, and 1035 in this Decision. Therefore, Patent Owner's Motion to Exclude is *dismissed as moot* with respect to Exhibits 1021–1022, 1027–1031, and 1035.

G. Patent Owner's Motion to Strike

Per our authorization (Paper 42) Patent Owner filed a Motion to Strike (Paper 47) Petitioner's Reply (Paper 33) alleging it "introduces significant new evidence and new arguments, which they could have and should have raised in their Petition." PO Mot. Str. 1. Petitioner opposes the Motion to Strike ("Pet. Opp. Mot. Str.," Paper 54). No reply was authorized. Patent Owner's Motion to Strike Petitioner's Reply (Paper 47) is denied.

Patent Owner argues that several portions of Petitioner's Reply should be stricken because they are beyond the scope of a proper reply.[27] PO Mot. Str. 1. Petitioner responds that the Reply is proper because it responds to

[27] Patent Owner also argues that Petitioner's Reply should be stricken in its entirety. PO Mot. Str. 1. Because we are not persuaded that any specific portions of the Reply should be stricken, we also are not persuaded that the entire Reply should be stricken.

arguments raised by Patent Owner in the Response. Pet. Opp. Str. 1. We have considered the parties' arguments, and, for the reasons discussed below, Patent Owner's Motion to Strike is *denied*. In addition, to the extent that this Decision does not rely on an argument or evidence that Patent Owner contends is improper, Patent Owner's Motion to Strike is moot as to that particular argument or evidence.

1. IsoEthernet

Patent Owner argues that Petitioner presented a new theory of unpatentability in the Reply based on Hunter's teaching of isoEthernet. PO Mot. Str. 2. Specifically, Patent Owner contends that "[t]he Reply newly asserts that 'Hunter's disclosure of isoEthernet also teaches Ethernet' and interjects new concepts: '[i]soEthernet . . . 10Base-T and ISDN modes' and 'isoEthernet interfaces.'" *Id.* (citing Pet. Reply 11:14–14, 15:14–17, 18:3–10; Second Crayford Decl. ¶¶ 48, 67–68, 73, 79–80).

We are not persuaded that the disputed portions of Petitioner's Reply are improper. Petitioner explains in the Petition that Hunter preferably uses a 10Base-T bus, but points out that Hunter is not limited to a 10Base-T bus because Hunter also is compatible with 100Base-T, isoEthernet, and ISDN. Pet. 24 ("[T]he bus [to the ISTE] comprises a 10Base-T bus."); *id.* at 25 ("compatible with ISDN standards"); *id.* at 25 ("a bus applying other Ethernet standards, such as ***100Base-T***"); *id.* at 26 ("the present invention is also compatible with ***Ethernet***®, Token Ring®, ATM, and ***isoEthernet***® standards."). Thus, Petitioner's reliance on isoEthernet is *not* a new theory of unpatentability raised for the first time in the Reply. *See Belden Inc. v. Berk-Tek LLC*, 805 F.3d 1064, 1080 (Fed. Cir. 2015).

Further, Patent Owner argues in the Response that Hunter does not teach contacts used to carry Base-T Ethernet communications signals. PO Resp. 41. In particular, Patent Owner contends that the "isoEthernet® interfaces [in Hunter] were part of an IEEE standard called 802.9a," which indicates that "isoEthernet used ISDN signals, ***not Ethernet signals***, to transmit data." *Id.* (citing Ex. 1003, 15:15–18; Madisetti Decl. ¶ 76). Petitioner responds in the Reply by explaining why Patent Owner's argument in the Response is incorrect. Pet. Reply 10–11. Specifically, in the Reply, Petitioner identifies evidence indicating that isoEthernet includes both an ISDN mode *and* a 10Base-T mode, and, as a result, is not limited to carrying just ISDN signals. *Id.* at 11 (citing Ex. 1003, 23:21–24, Ex. 1010, 165; Ex. 1032, 377; First Crayford Decl. ¶ 67). Thus, Petitioner's argument regarding isoEthernet in the Reply properly responds to an argument raised by Patent Owner in the Response. *See* 37 C.F.R. § 42.23(b); *Belden*, 805 F.3d at 1078–79. Further, we rely on the disputed portions of Petitioner's Reply only to explain, at least in part, why we are not persuaded by Patent Owner's argument in the Response. *See supra* Section II.C.3; *Belden*, 805 F.3d at 1078–79.

We note that Patent Owner specifically objects to Petitioner's reliance on "a newly-cited IEEE standard for 802.9," which Petitioner submitted as Exhibit 1032 with the Reply. PO Mot. Str. 2 (citing Pet. Reply 11:12–14, 12:3–7, 18:9; Ex. 1032). Patent Owner contends that Hunter only teaches "the trademarked version 'isoEthernet®,'" and Petitioner does not link the trademarked version of isoEthernet in Hunter with the IEEE standard described in Exhibit 1032. *Id.* at 2–3 (citing Pet. 26 n.8; Ex. 2055, 25:10–14, 31:9–21). Patent Owner also points out that Hunter refers to "IEEE draft

standard 802.9a," but Exhibit 1032 is not a draft and only describes IEEE standard 802.9. *Id.* at 3 (citing Ex. 1003, 16:7; Ex. 1032).

For the reasons discussed above, Petitioner's argument in the Reply regarding isoEthernet is a proper response to an argument raised by Patent Owner in the Response, not a new theory of unpatentability. Thus, we see no problem with Petitioner's reliance on Exhibit 1032 to support its argument regarding isoEthernet in the Reply. Nonetheless, we do not rely on Exhibit 1032 in this Decision. Rather, as discussed above, we rely on Exhibit 1010 as showing that isoEthernet includes a 10Base-T mode. *See supra* Section II.C.3. Petitioner submitted Exhibit 1010 with the Petition (Pet. IV), and cites Exhibit 1010 in the Reply (Pet. Reply 11). Also, like Hunter, Exhibit 1010 refers to the IEEE 802.9a standard for isoEthernet. Ex. 1003, 15:15–18; Ex. 1010, 160. Patent Owner does not raise any specific objections to Exhibit 1010 in the Motion to Strike. *See* PO Mot. Str. 1–3.

Patent Owner also argues that "had the ***Petition*** relied on isoEthernet (trademarked or otherwise) and/or Ex. 1032 as a basis for Ground 1, [Patent Owner] would have provided evidence with its Response that, as late as 1999, the IEEE isoEthernet committee prohibited combining phantom-power and Ethernet data signals ('10Base-T mode') to 'insure[] that 10Base-T services are unaffected.'" PO Mot. Str. 3 (citing Second Crayford Dep., 38:23–39:18). Patent Owner also presented this argument at the oral hearing and referred to it as an offer of proof under Fed. R. Evid. 103(a)(2). Tr. 83:2–18, 218:8-21. In connection with this offer of proof, Patent Owner alleged that it would have presented this evidence in a sur-reply, but was denied the opportunity to do so by the Board. *Id.*

Fed. R. Evid. 103(a)(2) provides that "[a] party may claim error in a ruling to . . . exclude evidence only if the error affects a substantial right of the party," and the party "informs the court of its substance by an offer of proof." We did not, however, exclude any evidence offered by Patent Owner or deny Patent Owner the opportunity to file a sur-reply in this proceeding. Patent Owner instead made a strategic decision to seek a motion to strike instead of a sur-reply. Specifically, Patent Owner requested "leave to file a motion to strike Petitioner's Reply Briefs in IPR Nos. 2016-01389, 2016-1391, 2016-1397, and 2016-1399 *or, in the alternative*, for leave to file a Sur-Reply." Ex. 3008, 1. In other words, Patent Owner identified a motion to strike as the preferred method to respond to Petitioner's Reply, and identified a sur-reply as an alternative to the motion to strike. *Id.* Because we granted Patent Owner's request for leave to file a motion to strike, we did not grant the proposed alternative of a sur-reply. Paper 42, 2–3. Patent Owner did not at any time prior to the oral hearing request a clarification of our ruling or identify any error in our ruling. Further, Patent Owner's attempt at the oral hearing to re-characterize its request as being for *both* a motion to strike *and* a sur-reply (Tr. 222:11–223:17) is contradicted by the express language Patent Owner used in its request to the Board (Ex. 3008, 1).

Lastly, Petitioner's arguments and evidence regarding isoEthernet in the Reply are not necessary to our ultimate determination in this proceeding. As discussed above, Hunter's teachings regarding 10Base-T alone satisfy the disputed limitations of the challenged claims. *See supra* Section II.C.2. Therefore, we determine that the challenged claims would have been

obvious over Hunter and Bulan, even without relying on Hunter's teachings regarding isoEthernet.

2. Bob Smith Terminations and Common Mode Chokes

Patent Owner argues that Petitioner addresses Bob Smith terminations and common mode chokes for the first time in the Reply. PO Mot. Str. 3–4 (citing Pet. Reply 2:13–4:8, 5:16–19; Exs. 1021–1024, 1029; Second Crayfor Decl. ¶¶ 12–21). Specifically, Patent Owner argues that Petitioner knew that the invention of the '107 patent is directed to equipment networked over pre-existing wiring and cables (PO Mot. Str. 4 (citing Pet. 3)), and that pre-existing Ethernet networks included Bob Smith terminations and common mode chokes (PO Mot. Str. 4 (citing Ex. 2039, 45:10–21; Ex. 2055, 65:13–67:11)), but did not address them in the Petition.

We are not persuaded that the disputed portions of Petitioner's Reply are improper. Patent Owner raises the issue of Bob Smith terminations and common mode chokes in the Response (PO Resp. 19–21), and Petitioner responds in the Reply with an explanation and evidence showing why Patent Owner's argument in the Response is incorrect (Pet. Reply 2–3). Thus, the portions of Petitioner's Reply that address Bob Smith terminations and common mode chokes are a proper response to an argument raised by Patent Owner in the Response, not a new theory of unpatentability. *See* 37 C.F.R. § 42.23(b); *Belden*, 805 F.3d at 1078–80. Further, we rely on the disputed portions of Petitioner's Reply only to explain, at least in part, why we are not persuaded by Patent Owner's argument in the Response. *See supra* Sections II.C.12, II.D.13; *Belden*, 805 F.3d at 1078–79.

Moreover, the disputed portions of Petitioner's Reply that address Bob Smith terminations and common mode chokes are not necessary to our

ultimate determination in this proceeding. As discussed above, the premise of Patent Owner's argument regarding Bob Smith terminations and common mode chokes—that the invention of the '107 patent is limited to equipment networked over pre-existing wiring or cables—is not supported by the specification or claims of the '107 patent. *See supra* Sections II.C.12, II.D.13. Therefore, we determine that the challenged claims would have been obvious over the asserted prior art combinations, even without relying on the disputed portions of Petitioner's Reply.

3. Fisher and De Nicolo Patents

Patent Owner argues that Petitioner submitted new exhibits with the Reply, specifically, the Fisher and De Nicolo patents, to show that using phantom power in an Ethernet network was known at the time of the '107 patent. PO Mot. Str. 5 (citing Pet. Reply 4:11–6:2, 9:11–18; Exs. 1025–1028; Second Crayford Decl. ¶¶ 27–35). Patent Owner acknowledges that Petitioner presents the same position in the Petition, but contends that Petitioner cannot cite new evidence in the Reply to support that position. *Id.* (citing Pet. 4–5).

We are not persuaded that the disputed portions of Petitioner's Reply are improper. Petitioner's position that using phantom power in an Ethernet network was known at the time of the '107 patent is presented in the Petition. Pet. 3–5. Patent Owner argues in the Response that "operating Power-over-Ethernet ('PoE') did not exist in 1997" (PO Resp. 8), and Petitioner responds in the Reply by citing to the Fisher and De Nicolo patents as evidence that Patent Owner's argument in the Response is incorrect (Pet. Reply 5 (citing Exs. 1025–1028)). Thus, the portions of Petitioner's Reply that cite to the Fisher and De Nicolo patents are a proper

response to an argument raised by Patent Owner in the Response, not a new theory of unpatentability. *See* 37 C.F.R. § 42.23(b); *Belden*, 805 F.3d at 1078–80. Further, we rely on the disputed portions of Petitioner's Reply only to explain, at least in part, why we are not persuaded by Patent Owner's argument in the Response. *See supra* sections II.C.12, II.D.13; *Belden*, 805 F.3d at 1078–79.

We note that Patent Owner specifically objects to Petitioner's reliance on the De Nicolo patents because Patent Owner alleges it could have demonstrated that the De Nicolo patents are not prior art to the '107 patent. PO Mot. Str. 5. Rather, as discussed above, we specifically rely on Hunter and the Fisher patents as showing that using phantom power in an Ethernet network was known at the time of the '107 patent. *See supra* sections II.C.12, II.D.13. We rely on the De Nicolo patents to the extent Petitioner's Reply and the Second Crayford Declaration make use of them as additional evidence, and a basis for expert testimony, showing that using phantom power in an Ethernet network was known at the time of the '107 patent.

Moreover, the disputed portions of Petitioner's Reply that rely on the Fisher and De Nicolo patents are not necessary to our ultimate determination in this proceeding. As discussed above, the teachings of Hunter alone demonstrate that using phantom power in an Ethernet network was known at the time of the '107 patent. *See supra* Sections II.C.3, II.C.12, II.D.13. Therefore, we determine that the challenged claims would have been obvious over the asserted prior art combinations, even without relying on the disputed portions of Petitioner's Reply.

4. Alleged Skepticism

Patent Owner argues that Petitioner addresses the objective indicia of non-obviousness, including skepticism of those skilled in the art, for the first time in the Reply. PO Mot. Str. 5–6 (citing Pet. Reply 6:6–7:5; Exs. 1035–1042; Second Crayford Decl. ¶¶ 36–44). Specifically, Patent Owner contends that Petitioner was "aware of the secondary considerations issues, but failed to address them in the Petition." PO Mot. Str. 6.

We are not persuaded that the disputed portions of Petitioner's Reply are improper. Patent Owner raises the issue of skepticism by those skilled in the art in the Response (PO Resp. 26–31), and Petitioner responds in the Reply with an explanation and evidence showing why Patent Owner's argument in the Response is incorrect (Pet. Reply 6–7). Thus, the portions of Petitioner's Reply that address the alleged skepticism of those skilled in the art are a proper response to an argument raised by Patent Owner in the Response, not a new theory of unpatentability. *See* 37 C.F.R. § 42.23(b); *Belden*, 805 F.3d at 1078–80. Further, we rely on the disputed portions of Petitioner's Reply only to explain, at least in part, why we are not persuaded by Patent Owner's argument in the Response. *See supra* Sections II.C.12, II.D.13; *Belden*, 805 F.3d at 1078–79.

Moreover, the disputed portions of Petitioner's Reply that address the alleged skepticism of those skilled in the art are not necessary to our ultimate determination in this proceeding. As discussed above, even if we just consider the evidence submitted by Patent Owner, it does not establish that those of skilled in the art were skeptical that phantom power would work in an Ethernet network. *See supra* Sections II.C.12, II.D.13. Therefore, we determine that the challenged claims would have been obvious over the

asserted prior art combinations, even without relying on the disputed portions of Petitioner's Reply.

5. CAT-3 and CAT-5 Cabling

Patent Owner argues that Petitioner addresses the number of conductors in CAT-3 and CAT5 cabling for the first time in the Reply. PO Mot. Str. 6–7 (citing Pet. Reply 9:19–10:5; Ex. 1031; Second Crayford Decl. ¶ 60). Specifically, Patent Owner contends that Petitioner knew that CAT-3 cabling was used for 10Base-T Ethernet and CAT-5 cabling was used for 100Base-T Ethernet, and, thus, "could have included" argument and evidence in the Petition regarding the number of conductors in that cabling. *Id.* at 7.

We are not persuaded that the disputed portions of Petitioner's Reply are improper. Patent Owner raises the issue of the number of conductors in CAT-3 and CAT5 cabling in the Response (PO Resp. 25–26), and Petitioner responds in the Reply with an explanation and evidence showing why Patent Owner's argument in the Response is incorrect (Pet. Reply 9–10). Thus, the portions of Petitioner's Reply that address the number of conductors in CAT-3 and CAT5 cabling are a proper response to an argument raised by Patent Owner in the Response, not a new theory of unpatentability. *See* 37 C.F.R. § 42.23(b); *Belden*, 805 F.3d at 1078–80.

Patent Owner also argues that, if Petitioner had addressed the number of conductors in CAT-3 and CAT5 cabling in the Petition, Patent Owner "would have included the cable specification for CAT-3/CAT-5 wiring, confirming that such cables comprise four wire pairs." PO Mot. Str. 7. (citing Ex. 2055, 171:23–176:13). Patent Owner also presented this argument at the oral hearing and referred to it as an offer of proof under Fed.

R. Evid. 103(a)(2). Tr. 220:19–221:2. As discussed above, Fed. R. Evid. 103(a)(2) provides that "[a] party may claim error in a ruling to . . . exclude evidence only if the error affects a substantial right of the party," and the party "informs the court of its substance by an offer of proof." We did not, however, exclude any evidence offered by Patent Owner or deny Patent Owner the opportunity to file a sur-reply in this proceeding. *See supra* Section II.G.1. Patent Owner instead made a strategic decision to seek a motion to strike instead of a sur-reply. *See id.*

Moreover, the disputed portions of Petitioner's Reply that address the number of conductors in CAT-3 and CAT5 cabling are not necessary to our ultimate determination in this proceeding. As discussed above, the portions of Hunter cited in the Petition independently demonstrate that a 10Base-T bus may include only two twisted pair conductors, not four. *See supra* Sections II.C.4, II.C.12, II.D.13. Therefore, we determine that the challenged claims would have been obvious over the asserted prior art combinations, even without relying on the disputed portions of Petitioner's Reply.

H. Oral Hearing Objections

Each party objected to arguments presented by the other party during the oral hearing. Petitioner objected that Patent Owner improperly raised new arguments for the first time at the oral hearing regarding the IEEE 802.9f specification, the CAT-3 and CAT-5 cabling specifications, blind power, and power levels. Tr. 216:15–217:7. We considered Patent Owner's arguments in the Response in light of any additional arguments presented by Patent Owner at the oral hearing, but we ultimately do not find Patent Owner's arguments persuasive for the reasons discussed in this Decision.

Thus, Petitioner would not suffer any prejudice by our admission of the arguments presented by Patent Owner at the oral hearing.

Patent Owner objected that Petitioner raised arguments at the oral hearing that were the subject of Patent Owner's Motion to Strike and/or Motion to Exclude. Tr. 66:20–67:20. For the reasons discussed above, we deny Patent Owner's Motion to Strike and dismiss-in-part and deny-in-part Patent Owner's Motion to Exclude. *See supra* Sections II.E, II.G. Thus, we see no problem with the arguments presented by Petitioner at the oral hearing.

III. ORDER

Accordingly, it is

ORDERED claims 1, 5, 31, 43, 70, 72, 74, 75, 83, 103, 104, 111, 123, and 125 of the '107 patent are held unpatentable;

FURTHER ORDERED that Patent Owner's Motion to Exclude is *denied-in-part* and *dismissed-in-part*;

FURTHER ORDERED that Petitioner's Motion to Exclude is *denied*;

FURTHER ORDERED that Patent Owner's Motion to Strike is *denied*;

FURTHER ORDERED that because this is a final written decision, parties to the proceeding seeking judicial review of the decision must comply with the notice and service requirements of 37 C.F.R. § 90.2.

PETITIONER:

Nima Hefazi
Michael Fleming
Jonathan Kagan
Talin Gordnia
IRELL & MANELLA, LLP
nhefazi@irell.com
mfleming@irell.com
jkagan@irell.com
tgordnia@irell.com

PATENT OWNER:

Frank A. Angileri
Thomas A. Lewry
Marc Lorelli
Christopher C. Smith
BROOKS KUSHMAN P.C.
fangileri@brookskushman.com
tlewry@brookskushman.com
csmith@brookskushman.com

Richard W. Hoffmann
REISING ETHINGTON P.C.
hoffmann@reising.com