2019-2141, -2172

UNITED STATES COURT OF APPEALS
FOR THE FEDERAL CIRCUIT

OPTICURRENT, LLC

Appellant,

v.

POWER INTEGRATIONS, INC.,

Cross-Appellant.

APPEAL FROM THE UNITED STATES DISTRICT COURT FOR THE NORTHERN DISTRICT OF CALIFORNIA, CASE NO. 3:17-CV-03597-EMC, JUDGE EDWARD M. CHEN

CROSS-APPELLANT'S OPENING BRIEF

Frank E. Scherkenbach
Fish & Richardson P.C.
One Marina Park Drive
Boston, MA 02110-1876
(617) 542-5070

John Thornburgh
Fish & Richardson P.C.
12390 El Camino Real
San Diego, CA 92130
(856) 678-5070

Michael R. Headley
Neil Warren
Fish & Richardson P.C.
500 Arguello Street, Suite 500
Redwood City, CA 94063
(650) 839-5070

October 9, 2019

CERTIFICATE OF INTEREST

Counsel for Cross-Appellant certifies the following:

1. Full name of every party represented by me is:

   Power Integrations, Inc.

2. Name of the real party in interest represented by me is:

   Power Integrations, Inc.

3. Parent corporations and publicly held companies that own 10% or more of stock in the party:

   BlackRock, Inc.

4. The names of all law firms and the partners or associates that appeared for the party or amicus now represented by me in the trial court or agency or are expected to appear in this court (including those who have not or will not enter an appearance in this case) are:

   Fish & Richardson P.C.: Frank. E. Scherkenbach; Michael R. Headley; Neil A. Warren; John Thornburgh; Joseph B. Warden; James Y. Wang* (*no longer with the firm).

5. The title and number of any case known to counsel to be pending in this or any other court or agency that will directly affect or be directly affected by this court's decision in the pending appeal. *Opticurrent, LLC v. Power Integrations, Inc.,* USDC-CAND Case No. 3:19-cv-3563-EMC.

Dated: October 9, 2019

Respectfully submitted,

By: */s/ Michael R. Headley*

Michael R. Headley
Fish & Richardson P.C.
500 Arguello Street, Suite 500
Redwood City, CA 94063
(650) 839-5070
headley@fr.com

ATTORNEYS FOR CROSS-APPELLANT
POWER INTEGRATIONS, INC.

TABLE OF CONTENTS

TABLE OF CONTENTS (cont'd)

TABLE OF AUTHORITIES

Page(s)

Cases

TABLE OFAUTHORITIES (cont'd)

Page

TABLE OFAUTHORITIES (cont'd)

Page

Statutes

STATEMENT OF RELATED CASES

Opticurrent has filed a second case asserting the same patent against Power Integrations: *Opticurrent, LLC v. Power Integrations, Inc.*, USDC-CAND Case No. 3:19-cv-3563-EMC. That case may be directly affected by this appeal.

STATEMENT OF JURISDICTION

Power Integrations, Inc. ("PI") agrees with Opticurrent that the Court has jurisdiction over this appeal. The Court also has jurisdiction over PI's cross-appeal pursuant to 28 U.S.C. § 1295(a)(1). PI's cross-appeal broadens PI's rights because it seeks to eliminate PI's liability.

INTRODUCTION

Opticurrent filed this appeal because the jury found no inducement, and the district court thereafter limited PI's liability to its direct U.S. sales. Opticurrent does not appeal the finding of no inducement, and it fails to show that the district court's extraterritoriality analysis was wrong. This Court need not reach that issue, however, because PI does not infringe the patent-in-suit. The district court erroneously construed "only three terminals" to permit *four* terminals, contrary to the plain claim language and intrinsic evidence. Because it is undisputed that the accused products have more than three terminals, this Court should reverse the district court's claim construction and the jury's finding of infringement.

Finally, Opticurrent also fails to demonstrate that the district court abused its discretion in permitting PI to drop its invalidity defense, without prejudice, to streamline trial. PI subsequently filed an *ex parte* request for reexamination, which the PTO granted, finding substantial new questions of patentability on five different grounds. That reexamination remains pending.

STATEMENT OF THE ISSUES

1. (On the cross-appeal) Did the district court err in construing the claim requiring "only three terminals" to include four terminals?

2. (On the cross-appeal) Even under the district court's claim construction, which excludes a fourth terminal "connected to a power supply," did the district court err in denying JMOL of noninfringement where it was undisputed that the accused products require power from a fourth terminal to operate?

3. (On Opticurrent's appeal) Did the district court properly grant JMOL to eliminate liability for noninfringing extraterritorial acts?

4. (On Opticurrent's appeal) Did the district court act within its discretion to dismiss PI's invalidity defense without prejudice when PI chose to streamline the case by informing the court it would not pursue that defense before trial?

STATEMENT OF THE CASE

I. THE PARTIES

Defendant PI is a semiconductor company based in San Jose, California. For the last 30 years, PI has been the leading developer and supplier of the chips that make modern power supplies—used to charge phones and other products—smaller, lighter, and more energy efficient. It has many patents of its own.

Plaintiff Opticurrent is a company formed in East Texas for the purpose of filing this litigation. It sells no products.

II. THE PATENT-IN-SUIT

Opticurrent accuses PI of infringing U.S. patent 6,958,623, entitled "Three Terminal Noninverting Transistor Switch." As suggested by the title, the '623 patent relates to three-terminal switches. A three-terminal switch is used to allow passage of current between the second and third terminals, based on a controlling signal received at the first terminal. As shown below in Fig. 2 from the '623 patent (annotated), the first terminal 113 will receive a control signal (high or low), and based on that control signal the circuit will cause current to either pass or be blocked by the switch 125 (highlighted in yellow) between the second terminal 115 and the third terminal 117:

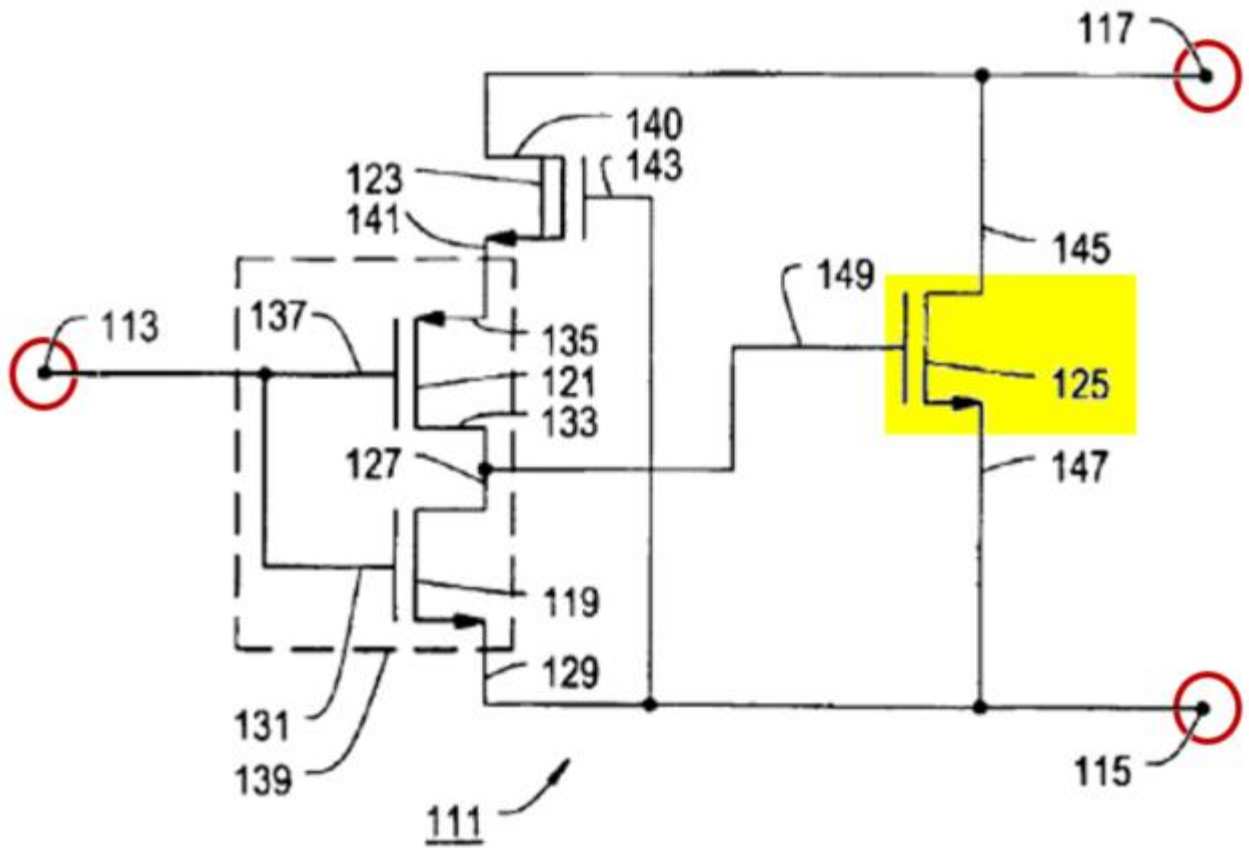

FIG. 2

The ’623 patent explains that its purported invention of a switch having “only three terminals” represents an improvement over prior art four-terminal switches:

> Noninverting transistor switches typically comprise at least four terminals, one terminal being connected to an input signal, another terminal being connected to a load, another terminal being connected to ground and the last terminal being connected to a power supply in order to provide a “second” inversion for the switch. . . . Noninverting transistor switches which comprise only three terminals do not require a fourth terminal connected to a power supply, thereby rendering noninverting transistor switches which comprise only three terminals

> more desirable than noninverting transistor switches which comprise at least four terminals.

Appx153 at 1:38-55.

Asserted claim 1 reflects this distinction. It recites "[a] noninverting transistor switch having ***only three*** terminals." Appx159 at 14:52-53. The specification further explains what "only three" means in this context: "Noninverting transistor switches which comprise only three terminals include a first terminal connected to an input signal, a second terminal connected to ground and a third terminal connected to a load." Appx153 at 1:47-50.

The specification of the '623 patent is perfectly consistent with the words "only three" having their easily understood English meaning: in each embodiment where the specification uses the word "only" in reference to "three terminals," it describes and shows a switch having exactly three terminals and never more:

- "In U.S. Pat. No. 5,134.323 to J. S. Congdon, there is disclosed a noninverting transistor switch having ***only three*** terminals, the three terminals being identified as a first terminal, a Second terminal and a third terminal." Appx153 at 1:56-59. This is illustrated in '623 patent Fig. 1 (Appx146).

- "Switch 111 is similar in construction to prior art switch 11 in that switch 111 comprises ***only three*** terminals." Appx155 at 5:16-17. This is illustrated in '623 patent Fig. 2 (Appx146) (reproduced above).
- "Switch 211 is similar in construction to switch 111 in that switch 211 comprises ***only three*** terminals." Appx156 at 8:49-50. This is illustrated in '623 patent Fig. 5 (Appx148).
- "Switch 311 is similar in construction with switch 211 in that switch 311 comprises ***only three*** terminals." Appx157 at 9:57-58. This is illustrated in '623 patent Fig. 6 (Appx149).

No embodiment or figure of the '623 patent uses a four-terminal switch to illustrate or describe a switch having "only three" terminals.

In fact, there are no figures or embodiments that illustrate four terminal switches at all. The patent discusses a fourth terminal only four times. The first three are quoted above: the patent says prior art "[n]oninverting transistor switches typically comprise at least four terminals"; "[n]oninverting transistor switches which comprise only three terminals do not require a fourth terminal connected to a power supply"; and "noninverting transistor switches which comprise only three terminals [are] more desirable than noninverting transistor switches which comprise at least

four terminals." Appx153 at 1:38-55. These references distinguish a four-terminal device from one that has "only three" terminals and explain why having "only three" terminals is more desirable.

The last time the patent mentions four terminals, it does so without reference to the claimed switch having "only three" terminals. Rather, it says that "the scope of the present invention also includes three terminal noninverting transistor switches that use a 'fourth' pin (power supply) for normal operation (and potentially even for enhancement purposes) but still operate (for example as a 'fail-safe' feature) without power applied to this 'fourth' power pin." Appx159 at 14:42-47. Critically, this passage does not use the word "only"; rather, it references non-restrictively described "three terminal noninverting transistor switches" rather than the claimed "noninverting transistor switch having ***only three*** terminals."

Finally, the patent states that "[i]t is yet another object of the present invention to provide a transistor switch as described above which contains ***only three*** terminals." Appx153 at 2:35-37. Here, again, the patent emphasizes the importance of having "only three" terminals, and not four.

III. CLAIM CONSTRUCTION

The parties disputed construction of the claim term "[a] noninverting transistor switch having only three terminals." PI proposed a straightforward

construction: "[a] noninverting transistor switch having no more than three terminals." Appx4820. Opticurrent proposed a construction that excised the word "only" from the claim: "[a] noninverting transistor switch having a first terminal connected to an input signal, a second terminal connected to ground and a third terminal connected to load." *Id.*

Judge Gilstrap of the Eastern District of Texas resolved this dispute before the case was transferred to the Northern District of California. He rejected both parties' proposed constructions and substituted his own construction: "a noninverting transistor switch with three terminals that does not have a fourth terminal connected to a power supply." Appx466. In other words, Judge Gilstrap construed "only three" to obviate the meaning of the word "only" and to instead permit four, while adding a negative limitation on the fourth terminal based on what it is connected to.

The Northern District of California (Judge Chen) subsequently adopted this construction. Appx2465 at 33:12-14.

IV. TRIAL

There is no dispute that all of PI's accused products are four terminal switches. Appx3801 at 402:2-5 (Opticurrent's expert, Dr. Zane); Appx3958 at 559:1-4, Appx3973 at 574:10-12 (PI's engineer, Mr. Kung); Appx4435-4458 (TinySwitch III datasheet). Trial thus focused on the negative limitation of Judge

Gilstrap's claim construction and whether PI's fourth terminal was "connected to a power supply." Appx466. PI introduced evidence that its accused products cannot be used unless the fourth terminal is attached to an external capacitor, which is necessary to supply power to the chip. *E.g.*, Appx3977 at 578:4-20, Appx4033 at 634:5-8 (Kung); Appx4049 at 650:16-23 (PI's expert, Mr. Bohannon); Appx4435-4458 (TinySwitch III datasheet) at Appx4437 ("When the MOSFET is on, the device operates from the energy stored in the bypass capacitor.").

Opticurrent did not dispute any of this evidence. Instead, it introduced evidence that the electric current that *charged* the capacitor connected to the fourth terminal originated from the third terminal, the drain terminal, when the switch was off. *E.g.*, Appx3755 at 356:12-16 (Zane); Appx4020-4021 at 621:2-622:23 (Kung). PI did not deny this, but its witnesses confirmed that the charged capacitor still powered the chip during operation and was the sole source of power when the switch was on. *E.g.*, Appx4033-4034 at 634:17-635:13 (Kung); Appx4435-4458 (TinySwitch III datasheet) at Appx4437 ("When the MOSFET is on, the device operates from the energy stored in the bypass capacitor."). Opticurrent also introduced evidence that the capacitor served a filtering function for the supplied power (*i.e.*, reducing fluctuations in the power supplied to the chip). *E.g.*, Appx3767 at 368:6-14 (Zane). Again, PI did not deny this, but its

witnesses confirmed that filtering, or reducing the variation, was not inconsistent with powering the chip. *E.g.*, Appx4008 at 609:14-16 (Kung).

Thus, the operation of the accused four-terminal products was not disputed at trial—each product (1) has four terminals, not three; and (2) uses the fourth terminal as the sole power source for at least part of its operation. The only direct infringement issue before the jury was really one of claim construction: is a fourth terminal connected to a capacitor that powers the chip "connected to a power supply"?

Despite reaffirming Judge Gilstrap's construction of "only three," Judge Chen expressed reservations about it at trial. For example, Judge Chen noted the disconnect between the language found in the patent at col. 14:42-47 and Judge Gilstrap's construction: "[T]here's ***some degree of ambiguity*** here that I read into Judge Gilstrap's—I get the gist of what he's saying, but whether or not there is a variant that could satisfy the 'not connected to a power supply' such that this specification language could satisfy the 'not connected to a power supply,' ***I'm not sure.***" Appx3570-3571 at 172:15-173:4. Judge Chen continued: "I'm not going to go back. I accept Judge Gilstrap's basic construction of this term. The question is, what does it mean to be—to have a fourth terminal connected to a power supply? If you have a fourth pin that is connected to a power supply but can still operate without power, does that constitute, quote, connected to a power supply?

That's the question." Appx3571 at 173:19-25. In other words, Judge Chen conceded he was "not sure" how Judge Gilstrap's construction was consistent with the specification's language at col. 14:42-47, but despite the ambiguity, he would accept it.

Judge Chen additionally noted the apparent ambiguity in applying the construction to the accused products: "I am suggesting that we might have to take a closer look at this question—I don't know if it's a jury question or not—to determine what is a terminal connected to a power supply, whether that's a legal question. It's something we should think about." Appx3572 at 174:17-21.

Despite Judge Chen's concerns, he included Judge Gilstrap's construction in the final jury instructions, Appx4219 at 819:20-23, over PI's continued objection, Appx4067 at 667:12-18. The jury found direct infringement, Appx2676.

Less successful for Opticurrent was its allegation that PI induced infringement. PI denied that it had the requisite mental state, and its witnesses testified they never believed PI's four-terminal switches could infringe a claim that required "only three" terminals. Appx3929-3930 at 530:3-531:16 (PI executive Walker); Appx3994-3995 at 595:24-596:23 (Kung). On this issue, the jury sided with PI, and found no induced infringement. Appx2677. Opticurrent has not appealed that verdict.

Next, the jury decided damages. Most of Opticurrent's damages were based on its inducement case since PI makes and usually sells its accused products abroad. Appx4178-4179 at 778:17-779:14 (PI sales executive Sutherland). PI provided undisputed testimony that it sells at most six percent of the accused products in the United States. Appx4179 at 779:6-9. Nonetheless, despite finding no inducement, the jury awarded Opticurrent the full amount of damages it requested—a 3% royalty on $222,216,159 (the latter of which is 33% of the total value of all of the accused products sold worldwide by PI during the relevant timeframe, *i.e.* all of the products Opticurrent argued were imported into the United States by *anyone*, rather than just those sold in the U.S. by PI). Appx2677; *compare* Appx4254 at 854:9-19.

Finally, the jury was not asked to decide validity. At the pretrial conference, PI informed the court that it did not intend to pursue this defense at trial. Appx2456-2457 at 24:13-25:8.

V. POST-TRIAL

Before the case went to the jury, PI filed a Rule 50(a) motion asking the court to find noninfringement as a matter of law, and also noting that liability for direct infringement must be limited to 6% of PI's total sales. Appx2615-2623.

After the verdict, PI renewed these motions. PI moved for JMOL or a new trial on infringement because the undisputed evidence showed that its accused

products all included a fourth terminal connected to a capacitor that powered the chip. Appx3075, Appx3079-3082. PI also renewed its objection to Judge Gilstrap's claim construction. Appx3083. The district court denied these motions. Appx51-54.

PI also moved for JMOL that its extraterritorial actions (making and selling the accused products abroad) did not constitute infringement, so liability should be capped at 6% of PI's total worldwide sales. Appx3077-3078. Undisputed evidence established that PI sold no more than 6% of the accused products in the United States during the relevant timeframe, and Opticurrent had not argued or proven that domestic infringement caused foreign damages. *Id.* The district court granted this motion, so the royalty base fell to $39,998,908.62. Appx54-60.

Opticurrent also moved to dismiss PI's invalidity defense with prejudice. Appx3241. PI argued that dismissal should be without prejudice, Appx4932-4939, and the district court exercised its discretion to dismiss without prejudice. Appx3369-3374 (finding that Opticurrent waived judgment as a matter of law on invalidity and that the court would not enter judgment against PI since PI withdrew invalidity at the pretrial conference); Appx143 (dismissing invalidity without prejudice). Subsequently, PI requested an *ex parte* reexamination of the '623 patent, and the PTO found substantial new questions of patentability based on five

different combinations of prior art. *See Ex Parte Reexamination* 90/014,297 (USPTO, May 24, 2019). That reexamination remains pending.

STANDARD OF REVIEW

This Court reviews a grant or denial of Rule 50 and Rule 59 motions under the law of the regional circuit, here the Ninth Circuit. *TVIIM, LLC v. McAfee, Inc.*, 851 F.3d 1356, 1362 (Fed. Cir. 2017). Under Ninth Circuit law, rulings on Rule 50 motions are reviewed *de novo* and rulings on Rule 59 motions are reviewed for abuse of discretion. *Id*.

This Court reviews a claim construction *de novo* where, as here, the district court made no findings based on extrinsic evidence. *Luminara Worldwide, LLC v. Liown Elecs. Co. Ltd.*, 814 F.3d 1343, 1352 (Fed. Cir. 2016). A judgment of infringement is reviewed for substantial evidence, which requires determining whether a reasonable jury could have found infringement under the correct claim construction. *Comcast IP Holdings I LLC v. Sprint Commc'ns Co., L.P.*, 850 F.3d 1302, 1309 (Fed. Cir. 2017).

Extraterritoriality is a question of law, reviewed *de novo*. *E.g.*, *North Dakota v. Heydinger*, 825 F.3d 912, 919 (8th Cir. 2016).

As Opticurrent notes (at 11), dismissals without prejudice are reviewed for abuse of discretion under Ninth Circuit law. *Michaud v. State Farm Ins.*, No. 96-17212, 1998 U.S. App. LEXIS 17252, at *3 (9th Cir. July 24, 1998).

SUMMARY OF THE ARGUMENT

Claim construction: The district court erred in construing "[a] noninverting transistor switch having only three terminals" as "a noninverting transistor switch with three terminals that does not have a fourth terminal connected to a power supply." The district court's construction ignores the plain claim language and is not supported by the intrinsic evidence.

Noninfringement: It is undisputed that the accused products have more than three terminals. In addition, even under the district court's claim construction, it is undisputed that the accused products' fourth terminal is connected to a capacitor that is the sole source of power when the switch is on. Thus, this fourth terminal is "connected to a power supply." This Court should therefore find no infringement as a matter of law. At a minimum, it should order a new trial on direct infringement.

Extraterritoriality: The jury found no inducement, and Opticurrent does not appeal that issue. Therefore, the district court correctly eliminated PI's noninfringing extraterritorial acts from liability.

Invalidity: The district court permitted PI to drop its invalidity defense without prejudice after PI informed the court it would not pursue that defense before trial. Opticurrent has shown no abuse of discretion.

ARGUMENT

I. This Court Should Vacate Judge Gilstrap's Construction of "Only Three," and Either Find Noninfringement As a Matter of Law or Remand for a New Trial

The asserted claim plainly requires a switch with "only three terminals." Appx159 at 14:52-53. This is in contrast to open-ended claim language that the patentee might have chosen, such as "comprising three terminals" without using the word "only." Indeed, if "only three" can be four, then the word "only" is stripped from the claim. Such a departure from the plain meaning of the claim would require significant intrinsic support to justify—yet, here, there is none at all. The patent itself never suggests that "only three" could mean four. Because Opticurrent can point to no clear disclaimer in the intrinsic record where the applicant altered the ordinary meaning of this claim language, the district court's construction—which permits a fourth terminal if it is "not connected to a power supply," Appx466—must be reversed.

As this Court explained in *Vitronics*, the Court first looks "to the words of the claims themselves, both asserted and nonasserted, to define the scope of the patented invention." *Vitronics Corp. v. Conceptronic, Inc.*, 90 F.3d 1576, 1582 (Fed. Cir. 1996). In addition, "[t]he standards for finding lexicography and disavowal are exacting." *GE Lighting Sols. v. AgiLight, Inc.*, 750 F.3d 1304, 1309 (Fed. Cir. 2014) ("To act as its own lexicographer, a patentee must 'clearly set

forth a definition of the disputed claim term,' and 'clearly express an intent to define the term.' Similarly, disavowal requires that 'the specification [or prosecution history] make[] clear that the invention does not include a particular feature.'") (internal citation omitted). Opticurrent did not come close to meeting these tests.

To the contrary, the intrinsic record emphasizes that it is an object of "the present invention" to "provide a transistor switch as described above which contains ***only three*** terminals." Appx153 at 2:35-37. Far from suggesting "only three" may be broadened to mean four, language such as this might suffice to constitute a *narrowing disclaimer* even if the claim language were not already equally narrow. *Pacing Techs., LLC v. Garmin Int'l, Inc.*, 778 F.3d 1021, 1024 (Fed. Cir. 2015) ("disavowal or disclaimer [has been found] based on clear and unmistakable statements by the patentee that limit the claims, such as 'the present invention includes ...' or 'the present invention is ...' or 'all embodiments of the present invention are....'").

Further, the patent even disparages four terminal devices as compared to those with "only three" terminals: "noninverting transistor switches which comprise only three terminals [are] more desirable than noninverting transistor switches which comprise at least four terminals." Appx153 at 1:38-55. This Court "also ha[s] found disclaimer when the patent repeatedly disparaged an embodiment

as 'antiquated,' having 'inherent inadequacies,' and then detailed the 'deficiencies [that] make it difficult' to use." *Pacing Techs.*, 778 F.3d at 1024-1025 (internal citation omitted).

To the extent that the patentee acted as a lexicographer at all, he defined "only three" in its ordinary way: "Noninverting transistor switches which comprise only three terminals include a first terminal connected to an input signal, a second terminal connected to ground and a third terminal connected to a load." Appx153 at 1:47-50. Still further, in each embodiment where the specification uses the word "only" in reference to three terminals, it describes and shows a device having *exactly* three terminals and never more. Appx153 at 1:56-59, Appx155 at 5:16-17, Appx156 at 8:49-50, Appx157 at 9:57-58; Appx146-149 at Figs. 1, 2, 5, 6. No embodiment or figure of the '623 patent uses a four-terminal switch to illustrate a switch having "only three" terminals.

No language in the specification supports the district court's construction of "[a] noninverting transistor switch having only three terminals" as "a noninverting transistor switch with three terminals that does not have a fourth terminal connected to a power supply." Judge Gilstrap cited the specification's statement that "[n]oninverting transistor switches which comprise only three terminals do not require a fourth terminal connected to a power supply" (Appx465, quoting Appx153 at 1:38-55), but touting the advantage of the invention and saying that it

does not "require" a fourth terminal connected to a power supply is far from redefining "only three" to mean "four." In other words, the purported advantage of the invention having "only three" terminals is that it does not need a fourth terminal at all, including the commonly used prior art fourth terminal connected to a power supply. Indeed, the statement cited by the district court appears in the context of distinguishing four terminal devices from those with "only three" terminals, which the patent says are "more desirable." Appx153 at 1:38-55.

The district court also cited the specification's catch-all conclusion: "the scope of the present invention also includes three terminal noninverting transistor switches that use a 'fourth' pin (power supply) for normal operation (and potentially even for enhancement purposes) but still operate (for example as a 'fail-safe' feature) without power applied to this 'fourth' power pin." Appx465, quoting Appx159 at 14:42-47. But this language does not support the court's construction for several reasons.

First, the language above at col. 14:42-47 does not use the critical "only three" language of the claim and the rest of the specification. That is, the passage carefully omits the word "only" and instead uses broader language—"three terminal noninverting transistor switches"—rather than the restrictive language of the claim and the rest of the specification: "[a] noninverting transistor switch having ***only three*** terminals." Far from supporting the district court's construction,

the specification's sole permissive reference to allowing a fourth terminal was carefully drafted to *not characterize* the switch as having "only three" terminals. And this Court has repeatedly held that claims are not required to cover all embodiments mentioned in the specification. *E.g.*, *Pacing Techs.*, 778 F.3d at 1026 ("every claim does not need to cover every embodiment"; rejecting argument similar to Opticurrent's).

Second, and more critically, the language at col. 14:42-47 expressly *contradicts* the district court's construction by saying that the fourth terminal *may be used* for a power supply for normal operation, whereas the district court's construction says that the fourth terminal *may not* be connected to a power supply. Noting the disconnect, Judge Chen conceded even he was "not sure" whether the embodiment described was inside or outside the scope of the claim as construed. Appx3570-3571 at 172:15-173:4 ("whether or not there is a variant that could satisfy the 'not connected to a power supply' such that this specification language could satisfy the 'not connected to a power supply,' I'm not sure."). In any event, the only language in the specification that in any way suggests a fourth terminal may be used at all, states that the fourth terminal ***can*** be used in the one way ***excluded*** by the district court.

Finally, the district court's construction significantly changed the structure of the claimed device and improperly transformed an apparatus claim (*what* the

claimed structure *is*) into a partial method claim (*how* it *used*, *i.e.*, whether it is "connected to a power supply"). Determining whether a given chip meets the claim language should turn on an evaluation of the structure of the chip itself, as is plainly recited in the claim. But the district court's claim construction changes this inquiry by defining the required device structure in terms of the structure and operation of what is not connected to its fourth terminal. The claim scope no longer defines a device itself, but rather how it used in a larger circuit and whether a fourth terminal is externally connected to a "power supply." This also strongly suggests the construction is wrong since mixed apparatus/method claims are generally invalid. *E.g.*, *IPXL Holdings, L.L.C. v. Amazon.com, Inc.*, 430 F.3d 1377, 1384 (Fed. Cir. 2005). Furthermore, as Judge Chen noted, Judge Gilstrap's construction is ambiguous and essentially left claim construction to the jury. Appx3570-3572 at 172:15-173:4, 173:19-25, 174:17-21. Opticurrent did not respond to Judge Chen's invitation to fix these problems. This too shows that the construction is incorrect.

For all of these reasons, the district court's claim construction should be vacated. In addition, this Court should hold that "only three" means "no more than three," and that PI's accused products do not infringe as a matter of law because they have four terminals. The evidence that PI's products have four terminals is undisputed. Appx3801 at 402:2-5 (Opticurrent's expert, Dr. Zane) ("Q. I

understand there's a dispute in this case over what the terminals do, but we can agree that at least looking at the diagram there's four terminals; right? A. Four pins in the product, yes."); Appx3958 at 559:1-4, Appx3973 at 574:10-12 (PI's engineer, Mr. Kung); Appx4435-4458 (TinySwitch III datasheet) at Appx4437. Opticurrent also conceded that it could not argue that three is equivalent to four. Appx3125. Under these circumstances, reversing the district court's denial of PI's JMOL motion, rather than ordering a new trial, is proper. *Exxon Chemical Patents, Inc. v. Lubrizol Corp.*, 64 F.3d 1553, 1560 (Fed. Cir. 1995) (vacating claim construction and finding noninfringement as a matter of law on appeal; "When we determine on appeal, as a matter of law, that a trial judge has misinterpreted a patent claim, we independently construe the claim to determine its correct meaning, and then determine if the facts presented at trial can support the appealed judgment. If not, we reverse the judgment below without remand for a second trial on the correct law.").

In the alternative, the Court should at a minimum remand for a new trial on direct infringement because instructing the jury that "only three" includes "four" was clearly prejudicial.

II. Even Under Judge Gilstrap's Claim Construction, the Court Should Find Noninfringement As a Matter of Law or Remand for a New Trial

Even applying Judge Gilstrap's erroneous construction, this Court should reverse the district court's denial of PI's JMOL and new trial motions because Opticurrent failed to introduce substantial evidence from which a reasonable jury could find infringement.

As detailed in the statement of the case, the *operation* of PI's accused products was not disputed at trial:

1. When the switch is on, PI's accused products require power from a capacitor connected to the fourth terminal to operate. Appx3977 at 578:4-20, Appx4033 at 634:5-8 (Kung); Appx4049 at 650:16-23 (PI's expert, Mr. Bohannon); Appx4435-4458 (TinySwitch III datasheet) at Appx4437 ("When the MOSFET is on, the device operates from the energy stored in the bypass capacitor.").
2. When the switch is off, the capacitor connected to the fourth terminal is charged from power drawn from the third terminal, the drain terminal. Appx3755 at 356:12-16 (Zane); Appx4020-4021 at 621:2-622:23 (Kung).
3. This capacitor also serves a filtering function. Appx3767 at 368:6-14 (Zane).

Opticurrent argued that facts 2 and 3 were somehow inconsistent with the fourth terminal being "connected to a power supply" under the district court's claim construction, but this was a false dichotomy. Opticurrent introduced no evidence that filtering and supplying power are mutually exclusive, and PI's engineer testified that a capacitor could do both. *E.g.*, Appx4008 at 609:14-16 (Kung) ("It's a filter. It's also a power supply."). Moreover, the fact that the third/drain terminal is connected to a power supply in order to charge the capacitor does not mean that the fourth terminal is not *also* connected to a power supply (the capacitor), as PI's witness explained:

> Q. Now, Mr. Suder questioned you at length about how the power at startup can come from the drain pin; do you recall that?
>
> A. Yes.
>
> Q. And that's perfectly consistent with what you explained on your direct, isn't it?
>
> A. Yeah, that's why I said it originates from drain.
>
> Q. And that's what you were describing throughout these graphics; right?
>
> A. I believe so.
>
> * * *

> Q. Does that change the fact that the element providing power during operation is the bypass capacitor [connected to the fourth terminal]?
>
> A. No.

Appx4033-4034 at 634:17-635:13.

Indeed, by Opticurrent's account, the fourth terminal is connected to *two* power supplies: (1) the main power supply (via the drain terminal) used to operate the part and charge the capacitor when the switch is off and (2) the capacitor, which is used to power the chip when the switch is on. The power supply connected to the drain terminal could not charge the capacitor connected to the fourth terminal—as Opticurrent alleges (*e.g.*, Appx3755 at 356:12-16)—unless they are all connected. The district court's claim construction necessarily excludes parts that have power supplies connected to *both* their third and fourth terminals, and Opticurrent's evidence suggesting that the third terminal provides power when the switch is off does not change the undisputed fact that only the fourth terminal can provide power when the switch is on. Appx4435-4458 (TinySwitch III datasheet) at Appx4437 ("When the MOSFET is on, the device operates from the energy stored in the bypass capacitor."). Thus, Opticurrent failed to provide substantial evidence of literal infringement.

Opticurrent also failed to provide substantial evidence of infringement under the doctrine of equivalents. While Opticurrent's expert Dr. Zane provided

testimony under the function/way/result test, Opticurrent's DOE case was legally defective.

First, Opticurrent conceded to the district court that it could not properly argue three is equivalent to four, or that connected is equivalent to not connected. Appx3125 ("Plaintiff never argued that a device having a fourth terminal connected to a power supply would infringe under the doctrine of equivalents."). The parties also agreed that the invention of the '623 patent involved moving from a four-terminal switch to a three-terminal switch. Appx3796 at 397:8-13 (Zane). With those concessions, it is clear there can be no infringement under the doctrine of equivalents. Since PI's accused products undisputedly require a fourth terminal connected to a capacitor to provide power when the switch is on, they cannot be equivalent to the opposite: a three-terminal switch that does not require a fourth terminal for power. As PI's expert explained, "does" cannot be equivalent to "does not." Appx4091 at 691:6-9.

Second, the "all elements rule" requires that *all* claim elements must be present even under the doctrine of equivalents. *Asyst Techs., Inc. v. Emtrak, Inc.*, 402 F.3d 1188, 1195 (Fed. Cir. 2005). In other words, the doctrine of equivalents does not permit Opticurrent to argue for "overall" equivalency; it was required to show an equivalent of each claimed element, including the presence of "a noninverting transistor switch having only three terminals." Opticurrent failed this

burden, making judgment as a matter of law appropriate since application of the all elements rule and the determination of claim element vitiation are questions of law for the Court. *Panduit Corp. v. HellermannTyton Corp.*, 451 F.3d 819, 826 (Fed. Cir. 2006).

The "all elements rule" also precludes use of the doctrine of equivalents "if applying the doctrine would vitiate an entire claim limitation." *Id* at 830. Under this doctrine, "the concept of equivalency cannot embrace a structure that is specifically excluded from the scope of the claims." *Dolly, Inc. v. Spalding & Evenflo Companies*, Inc., 16 F.3d 394, 400 (Fed. Cir. 1994); *Augme Techs., Inc. v. Yahoo! Inc.*, 755 F.3d 1326, 1335 (Fed. Cir. 2014). Such an equivalency vitiates the claim's specific exclusions. *See SciMed Life Sys., Inc. v. Advanced Cardiovascular Sys., Inc.*, 242 F.3d 1337, 1346-1347 (Fed. Cir. 2001) (a metallic device cannot be the equivalent of the claimed "non-metallic" device). Here, arguing that the accused four-terminal switches were equivalent to the claimed three-terminal switches vitiated the express claim requirement of "only three terminals." Likewise, arguing that the accused four-terminal switches, with a fourth terminal connected to a power supply, were equivalent to the claimed three-terminal switches, which lack a fourth terminal connected to a power supply, vitiated the express requirements of the claim.

Third, Opticurrent's main equivalents argument involved comparing the internal capacitor in the inventor Mr. Congdon's *prototype* with the external capacitor used by the accused products. *E.g.,* Appx3721 at 322:3-18 (Dr. Zane referring to Mr. Congdon's handwritten drawing, TX-32, to illustrate claim 1); Appx3724 at 325:2-12 (Dr. Zane expressly using TX-32 to argue equivalents); Appx3895 at 496:15-22 (Mr. Congdon testifying that his drawing depicts his breadboard TX-39); Appx3898 at 499:11-17 (Mr. Congdon testifying that his breadboard has a capacitor).) Yet it was improper to compare the patentee's product with the accused product; the law instead requires that the accused products be compared to the *asserted patent*. *Allen Engineering Corp. v. Bartell Industries, Inc.*, 299 F.3d 1336, 1351 (Fed. Cir. 2002) ("Infringement is determined by comparing the accused devices not with products made by the patentee but with the claims of the patent as properly construed."); *see also* Appx4221 at 821:4-12 (jury instruction). The '623 patent does not mention capacitors and does not depict a capacitor in any of its drawings. Appx145-161. This is another reason to reject Opticurrent's doctrine of equivalents argument as a matter of law.

Finally, it is undisputed that Mr. Congdon was aware of capacitors as shown in his drawing and as included on his prototype before he filed the '623 patent, yet he did not disclose this design in the patent. *E.g.*, Appx3897-3898 at 498:24-

499:17 (Congdon); Appx145-161. The portion of the specification relied upon by Opticurrent merely states "it should be noted that MOSFET 123 could be replaced by alternative types of conventional voltage stabilizers which are well known in the art without departing from the spirit of the present invention." Appx155 at 6:42-46. This vague statement does not disclose the capacitor design of Mr. Congdon's prototype. Having failed to put the public on notice of what it now claims infringes, Opticurrent may not rely upon the doctrine of equivalents, as a matter of law. *E.g.*, *Chiuminatta Concrete Concepts, Inc. v. Cardinal Industries, Inc.*, 145 F.3d 1303, 1310-1311 (Fed. Cir. 1998) ("given the prior knowledge of the technology asserted to be equivalent, it could readily have been disclosed in the patent," finding no equivalence); *Sipex Corp. v. Maxim Integrated Products, Inc.*, 2002 WL 1046699, at *1 (D. Mass. 2002) ("equivalent infringement is not available for structures which were known to the patent applicant at the time of his application but were not disclosed in the patent"); *Fulhorst v. Toyota Motor Corp.*, 2003 WL 25827240, at *20 (E.D. Tex. 2003) ("The quid pro quo for the patent is disclosure. If [the inventor] wishes to have it protected by patent, he must disclose it. If he chooses to keep it secret and not disclose it, there is no quid pro quo reason for the doctrine of equivalents, a rule of equity, to provide him patent protection by extending the reach of narrow claims he patented that do not cover

the nondisclosed invention."), *aff'd* 81 Fed. Appx. 309, 2003 WL 22701291 (Fed. Cir. 2003).

This Court should therefore reverse the district court's denial of JMOL of noninfringement as a matter of law even under Judge Gilstrap's claim construction. In the alternative, the Court at a minimum should find the jury's direct infringement verdict against the great weight of the evidence and remand for a new trial on that issue.

III. This Court Should Affirm Judge Chen's Exclusion of Extraterritorial Damages

Should the Court affirm any finding of infringement in this case, it should also affirm the district court's ruling on JMOL that PI's extraterritorial activities are noninfringing and must be excluded from liability. Again, extraterritoriality is an issue of law. *North Dakota v. Heydinger*, 825 F.3d 912, 919 (8th Cir. 2016).

Inducement cannot be a basis for liability in this case because the jury found that PI did not induce infringement, Appx2677, and Opticurrent has not appealed that verdict. Therefore, liability in this case (if any) must be premised on direct infringement.

As stated in the jury instructions, direct infringement requires proof that "Power Integrations has made, used, sold, offered for sale, or imported *within the*

United States a product covered by a claim of the '623 patent." Appx4220-4226 at 820:25-826:3 (emphasis added); *see also* 35 U.S.C. § 271(a).

At trial, Opticurrent made no effort to prove that PI directly infringed in the United States. By contrast, PI established the following key facts, which went unchallenged and unrebutted:

1. The accused products are manufactured outside the United States. Appx4178 at 778:17-22 (Sutherland).
2. In most cases, PI also sells the accused products outside the United States. Appx4178-4179 at 778:23-779:3.
3. For the products sold outside the United States, no part of the sales process occurs in the United States. Appx4179 at 779:10-14.
4. No more than five or six percent of PI's accused products were sold by PI in the United States during the relevant timeframe. Appx4179 at 779:6-9.

Given the above facts, the district court correctly ruled that PI's liability for *direct* infringement in this case is capped at 6% of its worldwide sales. Appx56-59.[1] Opticurrent's argument that one-third of PI's products entered the United States was based on an *inducement* theory—namely, that PI induced its foreign

[1] In fact, PI's U.S. sales of the accused products are even less than 6%. The district court's ongoing royalty order permits PI to pay only on its *actual* imports going forward. Appx144.

customers to import into the United States, and that one-third of PI's products were imported into the U.S. *by anyone (not just PI)* . Appx4166-4167 at 766:9-767:22, Appx4180 at 780:4-15, Appx4182-4183 at 782:22-783:5. But this theory failed since the jury found no inducement.

Given that PI's liability is capped at 6% of its worldwide sales, the district court also properly capped the number of infringing units—and thus the corresponding royalty base—at 6% of PI's worldwide sales. As this Court has repeatedly held, "[t]he royalty base for reasonable royalty damages cannot include activities that do not constitute patent infringement." *AstraZeneca AB v. Apotex Corp.*, 782 F.3d 1324, 1343 (Fed. Cir. 2015); *see also Enplas Display Device Corp. v. Seoul Semiconductor Co.*, 909 F.3d 398, 411-12 (Fed. Cir. 2018) (vacating damages award because royalty base included non-infringing activity).

Opticurrent cites cases relating to convoyed sales to argue that different, noninfringing products may sometimes be included in a royalty base. Opticurrent's argument is a *non sequitur* because it made no attempt to argue or prove convoyed sales in this case. That is, Opticurrent did not even mention "convoyed sales" at trial, and it made no attempt to prove the elements required to include convoyed sales in a royalty base. *See Enplas*, 909 F.3d at 412 n.3 ("We acknowledge that patentees may sometimes recover damages for 'convoyed sales,' ***where an unpatented product is sold with the patented product*** and the two are

'analogous to components of a single assembly or [are] parts of a complete machine, or they must constitute a functional unit.' We note that the convoyed sales doctrine does not apply here, nor does SSC rely on it."), citing *Rite-Hite Corp. v. Kelley Co.*, 56 F.3d 1538, 1550 (Fed. Cir. 1995) (*en banc*)(emphasis added). The convoyed sales doctrine is inapplicable here for the simple reason that PI's foreign units are not "unpatented" in the relevant sense – Opticurrent contends they are covered by its patent in just the same way as PI's U.S. units. And even if Opticurrent could clear that hurdle, Opticurrent failed to introduce evidence that PI's foreign units are sold with its U.S. units or that they are "analogous to components of a single assembly," "parts of a complete machine," or "a functional unit." To the contrary, each chip is a distinct functional unit.

Thus, the district court properly found the jury's royalty base ($222,216,159.00) unsustainable as a matter of law since it represented precisely one-third of PI's worldwide sales of the accused products. Appx4167 at 767:19-22; Appx4780 (showing worldwide revenues of $666,648,477). The district court therefore found that the largest possible royalty base was 6% of $666,648,477, or $39,998,908.62. Appx60.

On appeal, Opticurrent attempts to transform a liability issue into a damages issue. That is mistaken. PI does not directly infringe under Section 271(a) unless it "makes, uses, offers to sell, or sells any patented invention, within the United

States or imports into the United States any patented invention." That is what the statute says.

Opticurrent does not argue that it introduced evidence that PI performed any of the actions listed above, other than selling (at most) 6% of its foreign-made products in the United States. Again, since the jury found no induced infringement, that means that no more than six percent of PI's products *infringe*.

Yet the jury undisputedly awarded damages for noninfringing foreign sales. Opticurrent even admitted to the district court that "the Jury Properly Based Hypothetical Negotiation Multiplier on More than Only United States Based Sales." Appx3116. That was a fundamental legal error.

Opticurrent's reliance on *Carnegie Mellon Univ. v. Marvell Tech. Group, Ltd.*, 807 F.3d 1283 (Fed. Cir. 2015) is unfounded. That case does not hold that making and selling products abroad constitutes direct infringement. Nor does it hold, as Opticurrent asserted to the district court, that a defendant may be liable for direct infringement under Section 271(a) for importation "through third parties." Appx3114. Instead, *Carnegie Mellon* holds that estimated rates of importation by a defendant's customers may be used to calculate damages when the defendant is *found to induce infringement by its customers*. 807 F.3d at 1294 ("Marvell both directly and indirectly infringed the two (method) claims at issue"). Since PI was *not* found to induce infringement, PI is not liable for its customers' importations.

Opticurrent's attempt to distinguish this aspect of the case overlooks the clear statement of the district court (affirmed by this Court) that "CMU's liability theories against Marvell are *critical* to understanding the jury's damages award. At trial, CMU argued that Marvell directly infringed the CMU Patents by using the method of the patents during its sales cycle as well as *indirectly infringed by inducing* and contributing to the infringement by its customers in the United States." *Carnegie Mellon Univ. v. Marvell Tech. Group Ltd.*, 986 F. Supp. 2d. 574, 634-35 (W.D. Pa. 2013) (emphasis added). In other words, Marvel's *indirect* infringement expanded the universe of conduct it was liable for—to include importations by its customers.

Opticurrent ignores this background and argues that the Court discusses Section 271(a) in its opinion. *See Carnegie Mellon*, 807 F.3d at 1306-07. However, the reason the Court discusses direct infringement is because liability for indirect infringement requires proof of direct infringement by third parties. *E.g.*, *Micro Chem., Inc. v. Great Plains Chem. Co.*, 103 F.3d 1538, 1549 (Fed. Cir. 1997).

In addition, as the district court in this case noted, "Opticurrent's counsel acknowledged that his interpretation of *Carnegie Mellon* would allow a patentee to recover damages for induced infringement even after a jury verdict of no

inducement." Appx58. The district court rightly rejected Opticurrent's interpretation of *Carnegie Mellon*.

Opticurrent's next argument—that the jury awarded a royalty for foreign sales because the license between the inventor Mr. Congdon and his company QBar allegedly included royalties on foreign sales—is unsupported by any legal citation, and was also properly rejected by the district court. *AstraZeneca* and *Enplas* are again applicable. Foreign sales in this case—again, absent indirect infringement—no more infringe than sales of non-accused products or sales after a patent expires. Thus, this Court's holding in *AstraZeneca* governs: "[t]he royalty base for reasonable royalty damages cannot include activities that do not constitute patent infringement." 782 F.3d at 1343. Moreover, as Opticurrent admits (at 4), the QBar license included rights to *international* patents. No evidence was introduced at trial that PI would have agreed at the hypothetical negotiation to pay royalties on international sales when it was receiving rights only to a U.S. patent at the hypothetical negotiation.

Opticurrent is also wrong that *WesternGeco* supports its argument. *WesternGeco* only permits extraterritorial damages where such damages are *actually caused* by U.S. infringement. *WesternGeco LLC v. ION Geophysical Corp.*, 138 S. Ct. 2129, 2135 (2018) ("At trial, WesternGeco proved that it had lost 10 specific survey contracts due to ION's infringement."). By contrast,

Opticurrent never argued—much less introduced evidence—that it suffered any foreign damages *caused* by U.S. infringement. It says (at 21) that "one-third of the global supply gets imported into the United States based on reliable industry estimates," but this omits the crucial concept of whether such importation was *caused* by U.S. *infringement*. Opticurrent introduced no evidence that PI's U.S. sales of 6% of its products—PI's only possible infringement—*caused* anyone else to import additional products.[2]

Finally, the district court properly rejected Opticurrent's argument that PI waived any argument regarding whether U.S. activity is required to establish direct infringement. Appx59-60. Contrary to Opticurrent's assertion (at 31), PI successfully objected to Opticurrent's failure to include "United States" in the jury instructions. Appx4852, Appx4875 ("Omission of 'in the United States' after 'making, using, selling, offering for sale' is an error as direct infringement requires acts in the U.S."). The district court's instructions as given corrected this error.

---

[2] PI's litigation with Fairchild is different because the jury in that case found that direct infringement in the U.S. was the but for cause of PI's foreign lost profits, using the *Panduit* test. *Power Integrations, Inc. v. Fairchild Semiconductor Int'l, Inc.*, 711 F.3d 1348, 1370 (Fed. Cir. 2013) ("Power Integrations argues that it was foreseeable that Fairchild's infringement in the United States would *cause* Power Integrations to lose sales in foreign markets. Thus, Power Integrations argues, the law supports an award of damages for the lost foreign sales which Power Integrations would have made *but for* Fairchild's domestic infringement.") (emphasis added). That case is now back before this Court following *WesternGeco*. *See* Cases 2019-1246, 2019-1247.

Appx3608-3609 at 209:25-210:5 ("A valid United States patent gives the patent holder the right to prevent others from making, using, offering to sell, or selling the patent invention within the United States or from importing it into the United States during the term of the patent without the patent holder's permission.").

There was also no ambush: PI timely filed a motion under Rule 50(a), before the case went to the jury, arguing that liability for direct infringement could be no more than 6% of PI's sales. Appx2616 ("As established by Mr. Sutherland, the accused products are manufactured abroad, and PI also sells at least 94% of them overseas. As stated in the Court's proposed jury instructions, direct infringement requires proof that 'Power Integrations has made, used, sold, offered for sale or imported within the United States a product covered by a claim of the '623 patent.'"). That is all that is required to preserve a JMOL motion.

Opticurrent's various other waiver arguments fare no better. Opticurrent cites no authority that a party is required to argue a JMOL issue to a jury in the Ninth Circuit, and there is none. *See Warrillow v. Qualcomm, Inc.*, 268 Fed. Appx. 561, 562 (9th Cir. 2008) (closing argument is not a Rule 50(a) motion). A party is not even required to present a closing argument. The district court also properly instructed the Jury that "the statements of the attorneys themselves are not evidence." Appx3598 at 199:18-19.

Opticurrent's cited cases are not to the contrary. *Matos* rejects an appeal based on failure to give an unrequested cautionary instruction. *Matos v. Chloe Z Fishing Co.*, 1997 U.S. App. LEXIS 31763, at *3-4 (9th Cir. Nov. 7, 1997). It nowhere suggests legal issues must be argued to the jury. *Leonard* bases its holding on the fact that "the jury was presented with no *evidence* that provided an alternative calculation." *Leonard v. Stemtech Int'l, Inc.*, 834 F.3d 379, 394 (3d Cir. 2016) (emphasis added). It nowhere says *argument* is required, and PI did present *evidence* about importation. *Steves & Sons* and *MEI* are the same. *Steves & Sons, Inc. v. Jeld-Wen, Inc.*, 3:16-cv-545, 2019 U.S. Dist. LEXIS 41232, at *15 (E.D. Va. Mar. 13, 2019) ("JELD-WEN must bear the consequences of failing to give the jury an alternative form of *evidence* from which to choose") (emphasis added); *MEI Int'l, Inc. v. Schenkers Int'l Forwarders, Inc.*, 807 F. Supp. 979, 989 (S.D.N.Y. 1992) (defendant "waived" the "opportunity to present contrary *proof*") (emphasis added).

PI also preserved objections to the admission of its revenue, including specifically its foreign revenue. *E.g.*, Appx2156-2160; Appx2599-2604. The district court overruled these objections to the *admission* of revenues, but again the jury instructions still required Opticurrent to link those revenues to infringement in the United States. Appx3608-3609 at 209:25-210:5. This, Opticurrent failed to do, for at least 94% of PI's sales. Finally, Opticurrent is wrong that PI in any way

blessed *liability* for extraterritorial acts when it discussed the revenue summaries created by Opticurrent's excluded damages expert, Mr. Evans. *See* Appx2146-2147. Opticurrent did not even use Mr. Evans' summaries at trial. *See* Appx3061. In any event, *accurate sales data* does not create liability for non-infringing acts. In short, Opticurrent's waiver arguments are not meritorious. The district court properly capped infringement liability (and resulting damages) at six percent of PI's worldwide sales, as a matter of law.

IV. This Court Should Affirm Judge Chen's Dismissal of PI's Invalidity Defense Without Prejudice

The district court properly permitted PI to dismiss its invalidity defense without prejudice. As Opticurrent admits (at 11), such dismissals are reviewed for abuse of discretion under Ninth Circuit law, and Opticurrent has failed to show any abuse of discretion.

Here, the district court carefully weighed Opticurrent's argument for dismissal with prejudice and concluded that dismissal without prejudice was appropriate because "although PI included invalidity as a possible issue in the joint pretrial statement, it clearly apprised the Court and Opticurrent at the final pretrial conference that it would be reserving its invalidity defense for another day." Appx3371-3372 (internal citation omitted). The district court also cited this Court's holding that "judgment as a matter of law should be granted only on issues

that were 'litigated, or fairly placed in issue, during the trial.'" Appx3371, quoting *Alcon Research Ltd. v. Barr Laboratories, Inc.*, 745 F.3d 1180, 1193 (Fed. Cir. 2014). In *Alcon*, this Court also noted in that case that "we have not previously held that a formal motion or stipulation was required to remove claims from a case and we decline to do so here. On the contrary, we recently decided that a patentee's announcement that it was no longer pursuing particular claims, coupled with its ceasing to litigate them, was sufficient to remove those claims from the case even without such formalities." 745 F.3d at 1193. Such an approach is sensible, because it encourages parties to streamline their case before trial.

None of Opticurrent's cited cases requires a different result. Its first case, *Tyco*, actually affirms dismissal without prejudice, finding no abuse of discretion. *Tyco Healthcare Group LP v. Ethicon Endo-Surgery, Inc.*, 587 F.3d 1375, 1380 (Fed. Cir. 2009). *Foster* does not mention dismissal with or without prejudice, and holds that it cannot reach any conclusion on issue or claim preclusion. *Foster v. Hallco Mfg. Co.*, 947 F.2d 469, 483 (Fed. Cir. 1991). *Litecubes* also does not address dismissal with or without prejudice; instead, it focuses on subject matter jurisdiction. *Litecubes, LLC v. N. Light Prods., Inc.*, 523 F.3d 1353, 1361 (Fed. Cir. 2008). Opticurrent's altered quotation is misleading. Opticurrent states (at 34) that the Court held "a failure to prove the allegations alleged in a complaint requires a decision on the merits, not a [mere dismissal]" when the Court actually

wrote "a failure to prove the allegations alleged in a complaint requires a decision on the merits, not *a dismissal for lack of subject matter jurisdiction*." 523 F.3d at 1361 (emphasis added). Finally, *Cordis* addresses the same subject matter jurisdiction issue, not the district court's discretion to dismiss dropped claims without prejudice. *Cordis Corp. v. Boston Sci. Corp.*, 561 F.3d 1319, 1339-40 (Fed. Cir. 2009).

Opticurrent's argument (at 33) that the district court "lacked authority" to dismiss PI's defense without prejudice because PI's "counterclaim had already been adjudged against it" lacks citation and is incorrect. The earlier judgment—like the jury's verdict—says nothing about validity. Appx2679; Appx2676-2678. In addition, final judgment was not entered until July 3, 2019, and it recites dismissal of PI's invalidity defense without prejudice. Appx143. The earlier judgment following the jury's verdict, cited by Opticurrent, was not final because the parties' post-trial motions remained unresolved. Opticurrent cites no authority for its unexplained assertion that the earlier judgment was "final."[3]

Finally, Opticurrent wholly ignores the district court's second, independent ground for denying Opticurrent's motion for judgment on validity: Opticurrent waived its rights by failing to timely file a motion for judgment as a matter of law

[3] Moreover, if the earlier judgment were final, Opticurrent's appeal would be untimely.

of no invalidity. Appx3370 (noting that Rule 50(b) requires renewal of motions within 28 days after the jury was discharged for issues not submitted to the jury, and that Ninth Circuit law requires renewal). Opticurrent's brief offers no response to this fundamental failure.

The district court thus properly exercised its discretion to dismiss invalidity without prejudice.

CONCLUSION

This Court should vacate the district court's construction of "only three" and find noninfringement as a matter of law. In the alternative, it should find noninfringement as a matter of law under the district court's construction, or it should remand for a new trial on direct infringement. Should liability be upheld, the Court should affirm the district court's exclusion of extraterritorial liability. Finally, the Court should affirm the district court's dismissal of PI's invalidity defense without prejudice.

Dated: October 9, 2019

Respectfully submitted,

By: */s/ Michael R. Headley*

Michael R. Headley
Fish & Richardson P.C.
500 Arguello Street, Suite 500
Redwood City, CA 94063
(650) 839-5070
headley@fr.com

ATTORNEYS FOR CROSS-APPELLANT
POWER INTEGRATIONS, INC.

CERTIFICATE OF SERVICE AND FILING

I hereby certify that I electronically filed the foregoing document using the Court's CM / ECF filing system on October 9, 2019. All counsel of record were served via CM / ECF on October 9, 2019.

Dated: October 9, 2019 Respectfully submitted,

By: */s/ Michael R. Headley*

Michael R. Headley
Fish & Richardson P.C.
500 Arguello Street, Suite 500
Redwood City, CA 94063
(650) 839-5070
headley@fr.com

ATTORNEYS FOR CROSS-APPELLANT
POWER INTEGRATIONS, INC.

CERTIFICATE OF COMPLIANCE

The undersigned attorney certifies that the foregoing document complies with the type-volume limitation set forth in Fed. R. App. P. 27. The relevant portions of the brief, including all footnotes, contain 9109 words, as determined by Microsoft Word.

Dated: October 9, 2019 Respectfully submitted,

By: */s/ Michael R. Headley*

Michael R. Headley
Fish & Richardson P.C.
500 Arguello Street, Suite 500
Redwood City, CA 94063
(650) 839-5070
headley@fr.com

ATTORNEYS FOR CROSS-APPELLANT
POWER INTEGRATIONS, INC.